1. ALL RESISTANCE VALUES ARE IN OHMS, 0.1 WATT +/- 5%.
2. ALL CAPACITANCE VALUES ARE IN MICROFARADS.
3. ALL CRYSTALS & OSCILLATOR VALUES ARE IN HERTZ.

REV	ECN	DESCRIPTION OF REVISION	CK APPD / DATE
1	0001625056	ENGINEERING RELEASED	2012-09-11

X152 SINGLE_BRD PROTO2

Fri Sep 7 15:06:38 2012

PDF PAGE	CSA PAGE	CONTENTS	SYNC MASTER	DATE
2	2	H6P JTAG,USB,PLL,HSIC,XTAL	N/A	N/A
3	3	H6P DIGITAL I/O,BOOTSTRAPPING	N/A	N/A
4	4	H6P VDDCA,VDD1/2,VDD,VDD_CPU,VDD_GPU	N/A	N/A
5	5	H6P GND,VDDIO18,VDDIOD,VDD_SRAM,VDD_SOC	N/A	N/A
6	6	H6P NAND,NAND 12X17	N/A	N/A
7	7	H6P HIGH SPEED DIG (CAM,LCM,DP)	N/A	N/A
8	8	BUTTON FLEX B2B	N/A	N/A
9	9	L67 AUDIO CODEC (1/2)	N/A	N/A
10	10	L67 AUDIO CODEC (2/2)	N/A	N/A
11	11	FRONT CAM FLEX B2B	N/A	N/A
12	12	AMBER PMU(1/2)	N/A	N/A
13	13	AMBER PMU(2/2)	N/A	N/A
14	14	CHESTNUT,BACKLIGHT DRIVER,MESA BOOST	N/A	N/A
15	15	SPKR AMP + STROBE DRIVER	N/A	N/A
16	16	TRISTAR,EEPROM	N/A	N/A
17	17	DOCKFLEX B2B	N/A	N/A
18	18	D403 (TOUCH B2B, DRIVER ICS)	N/A	N/A
19	19	LCM B2B	N/A	N/A
20	20	OSCAR + SENSORS	N/A	N/A
21	21	REAR CAM B2B	N/A	N/A
22	22	BATT B2B, TPS, PD FEATURES	N/A	N/A
23	23	RADIO_MLB HIERARCH. SYMBOL	N/A	N/A
24	24	Cross Reference Page		

CHESTNUT BOM OPTIONS

PART#	QTY	DESCRIPTION	REFERENCE DESIGNATOR(S)	CRITICAL	BOM OPTION
338S1172	1	TI CHESTNUT	U3	Y	CHESTNUT_TI
152S1806	1	TI CHESTNUT IND - 1.5UH TFA-A	L19	Y	CHESTNUT_TI_TFA-A
152S1649	1	TI CHESTNUT IND - 1.5UH TFA-G	L19	Y	CHESTNUT_TI_TFA-G
338S1168	1	INTERSIL CHESTNUT	U3	Y	CHESTNUT_INTERSIL
152S1805	1	INTERSIL CHESTNUT IND - 2.2UH TFA-A	L19	Y	CHESTNUT_INTERSIL_TFA-A
152S1611	1	INTERSIL CHESTNUT IND - 2.2UH TFA-G	L19	Y	CHESTNUT_INTERSIL_TFA-G

COMPASS BOM OPTIONS

PART#	QTY	DESCRIPTION	REFERENCE DESIGNATOR(S)	CRITICAL	BOM OPTION
639-4024	1	COMPASS INTERPOSER MODULE	U16	Y	COMPASS_INTERPOSER

HORIZONTAL CAP BOM OPTIONS

	PART#	QTY	DESCRIPTION	REFERENCE DESIGNATOR(S)	CRITICAL	BOM OPTION
PP_VCC_MAIN BULK CAP (AP)	138S0801	5	HRZNTL CAPS_1: 10UF,0402,6.3V	C422,C399,C405,C417,C418	Y	HRZNTL_CAP_GRP1
	138S0801	5	HRZNTL CAPS_2: 10UF,0402,6.3V	C250,C251,C325,C357,C358	Y	HRZNTL_CAP_GRP2
	138S0801	5	HRZNTL CAPS_3: 10UF,0402,6.3V	C260,C263,C267,C270,C261	Y	HRZNTL_CAP_GRP3
	138S0801	4	HRZNTL CAPS_4: 10UF,0402,6.3V	C264,C268,C271,C385	Y	HRZNTL_CAP_GRP4
	138S0801	5	HRZNTL CAPS_5: 10UF,0402,6.3V	C398,C401,C411,C252,C297	Y	HRZNTL_CAP_GRP5
PP_BATT_VCC BULK CAP (AP)	138S0801	5	HRZNTL CAPS_6: 10UF,0402,6.3V	C386,C387,C333,C332,C335	Y	HRZNTL_CAP_GRP6
PP_BATT_VCC BULK CAP (RF)	138S0801	3	HRZNTL CAPS_7: 10UF,0402,6.3V	C42_RF,C43_RF,C44_RF	Y	HRZNTL_CAP_GRP7
	138S0801	1	HRZNTL CAPS_8: 10UF,0402,6.3V	C1201_RF	Y	HRZNTL_CAP_GRP8
PP_VCC_MAIN BULK CAP (RF)	138S0801	1	HRZNTL CAPS_9: 10UF,0402,6.3V	C103_RF	Y	HRZNTL_CAP_GRP9
PP3V0_NAND BULK CAP	138S0801	4	HRZNTL CAPS_10: 10UF,0402,6.3V	C182,C307,C209,C187	Y	HRZNTL_CAP_GRP10
PP5V7_SAGE_AVDDH BULK CAP	138S0801	2	HRZNTL CAPS_11: 10UF,0402,6.3V	C52,C156	Y	HRZNTL_CAP_GRP11

INDUCTOR BOM OPTIONS

PART#	QTY	DESCRIPTION	REFERENCE DESIGNATOR(S)	CRITICAL	BOM OPTION
152S1666	2	BUCK0 SLAVE IND: 1UH, TFA-G	L10,L12	Y	IND_BUCK0_SLV_1UH
152S1725	2	BUCK0 SLAVE IND: 0.47UH, TFA-G	L10,L12	Y	IND_BUCK0_SLV_P47UH_TFA-G
152S1785	2	BUCK0 SLAVE IND: 0.47UH, TFA-A	L10,L12	Y	IND_BUCK0_SLV_P47UH_TFA-A
152S1800	1	SPKR AMP IND: 1UH CYNTEC	L4	Y	IND_SPKRAMP_1UH_CYNTEC
152S1808	1	SPKR AMP IND: 1UH TFA-A	L4	Y	IND_SPKAMP_1UH_TFA-A
152S1807	1	STROBE IND: 1UH TFA-A	L5	Y	IND_STROBE_1UH_TFA-A
152S1807	7	AMBER BUCKXX IND: 1UH TFA-A	L9,L11,L13,L14,L15,L16,L17	Y	IND_BUCKXX_1UH_TFA-A
152S1809	1	BUCK5 2012 IND: 1UH TFA-A	L18	Y	IND_BUCK5_1UH_TFA-A
152S1805	1	CHARGER IND: 2.2UH TFA-A	L8	Y	IND_CHGR_2P2UH_TFA-A

X152 BOM CALLOUTS

PART#	QTY	DESCRIPTION	REFERENCE DESIGNATOR(S)	CRITICAL	BOM OPTION
051-9681	1	SCH, SINGLE_BRD, X152	SCH	Y	?
820-3382	1	PCBF, SINGLE_BRD, X152	PCB	Y	?
825-6838	1	EEEE FOR 639-4159 16GB	EEEE_F7V1	Y	EEEE_16G
825-6838	1	EEEE FOR 639-4160 32GB	EEEE_F7V2	Y	EEEE_32G
825-6838	1	EEEE FOR 639-3973 64GB	EEEE_F4LR	Y	EEEE_64G
339S0206	1	H6P + 1GB SAMSUNG	U1	Y	H6P_1GB_SAMSUNG
339S0207	1	H6P + 1GB ELPIDA	U1	Y	H6P_1GB_ELPIDA
339S0208	1	H6P + 1GB HYNIX	U1	Y	H6P_1GB_HYNIX

OSCAR BOM OPTIONS

PART#	QTY	DESCRIPTION	REFERENCE DESIGNATOR(S)	CRITICAL	BOM OPTION
998-5272	1	OSCAR_MODULE, CRENELATED CRNR	U9	Y	OSCAR_MODULE
337S4370	1	OSCAR CSP	U9	Y	OSCAR_CSP

OPEL BOM OPTIONS

PART#	QTY	DESCRIPTION	REFERENCE DESIGNATOR(S)	CRITICAL	BOM OPTION
353S3899	1	TI OPEL	U17	Y	OPEL_TI
353S3839	1	FAIRCHILD OPEL	U17	Y	OPEL_FAIRCHILD

NAND BOM OPTIONS

PART#	QTY	DESCRIPTION	REFERENCE DESIGNATOR(S)	CRITICAL	BOM OPTION
335S0878	1	NAND,19NM,16GX8,MLC,PPN1.5	U4	Y	NAND_16G
335S0879	1	NAND,19NM,32GX8,MLC,PPN1.5	U4	Y	NAND_32G
335S0880	1	NAND,19NM,64GX8,MLC,PPN1.5	U4	Y	NAND_64G

ADD SANDISK NAND (338S0900/1/2) BACK IN AFTER PRE-PROTO2

USB GOLDENEYE BOM OPTIONS

PART#	QTY	DESCRIPTION	REFERENCE DESIGNATOR(S)	CRITICAL	BOM OPTION
155S0583	2	E75 COMMON MODE CHOKES	L20,L22	Y	CMC_E75_DIFFPAIRS
152S1737	2	USB TX 10UH SERIES INDUCTORS	R163,R164	Y	USB_TX_SERIES_IND

I2C ADDRESS MAP

I2C0

DEVICE	BINARY	7-BIT HEX	8-BIT HEX
AMBER PMU:	1110100X	0X74	0XE8
CS35L19B AMP:	1000000X	0X40	0X80
LM3534 BL DRIVER:	1100011X	0X63	0XC6
TRISTAR:	0011010X	0X1A	0X34
CHESTNUT:	0100111X	0X27	0X4E

I2C1

CT814 ALS:	0101001X	0X29	0X52

RCAM I2C

OPEL STROBE DRIVER:	1100011X	0X63	0XC6
REAR FACING CAM:	100001000X	0X108(3BYTES)	0X210
VCM AF DRIVER:	0001110X	0X0E	0X1C

FCAM I2C

FRONT FACING CAM:	1101100X	0X6C	0XD8

NOTE: ACCEL, GYRO, COMPASS ALL USING SPI (VIA OSCAR) FOR AP COMMUNICATION.

SCH 051-9681
BRD 820-3382
MCO 056-5179
BOM 639-4159 (16GB) X152
BOM 639-4160 (32GB) X152
BOM 639-3973 (64GB) X152

DRAWING TITLE: SCH,SINGLE_BRD,X152

Apple Inc.

DRAWING NUMBER: 051-9681 SIZE: D
REVISION: 1.0.0
BRANCH:
PAGE: 1 OF 26
SHEET: 1 OF 70

NOTICE OF PROPRIETARY PROPERTY:
THE INFORMATION CONTAINED HEREIN IS THE PROPRIETARY PROPERTY OF APPLE INC.
THE POSESSOR AGREES TO THE FOLLOWING:
I TO MAINTAIN THIS DOCUMENT IN CONFIDENCE
II NOT TO REPRODUCE OR COPY IT
III NOT TO REVEAL OR PUBLISH IT IN WHOLE OR PART
IV ALL RIGHTS RESERVED

H6P: JTAG, USB, PLL, HSIC, XTAL

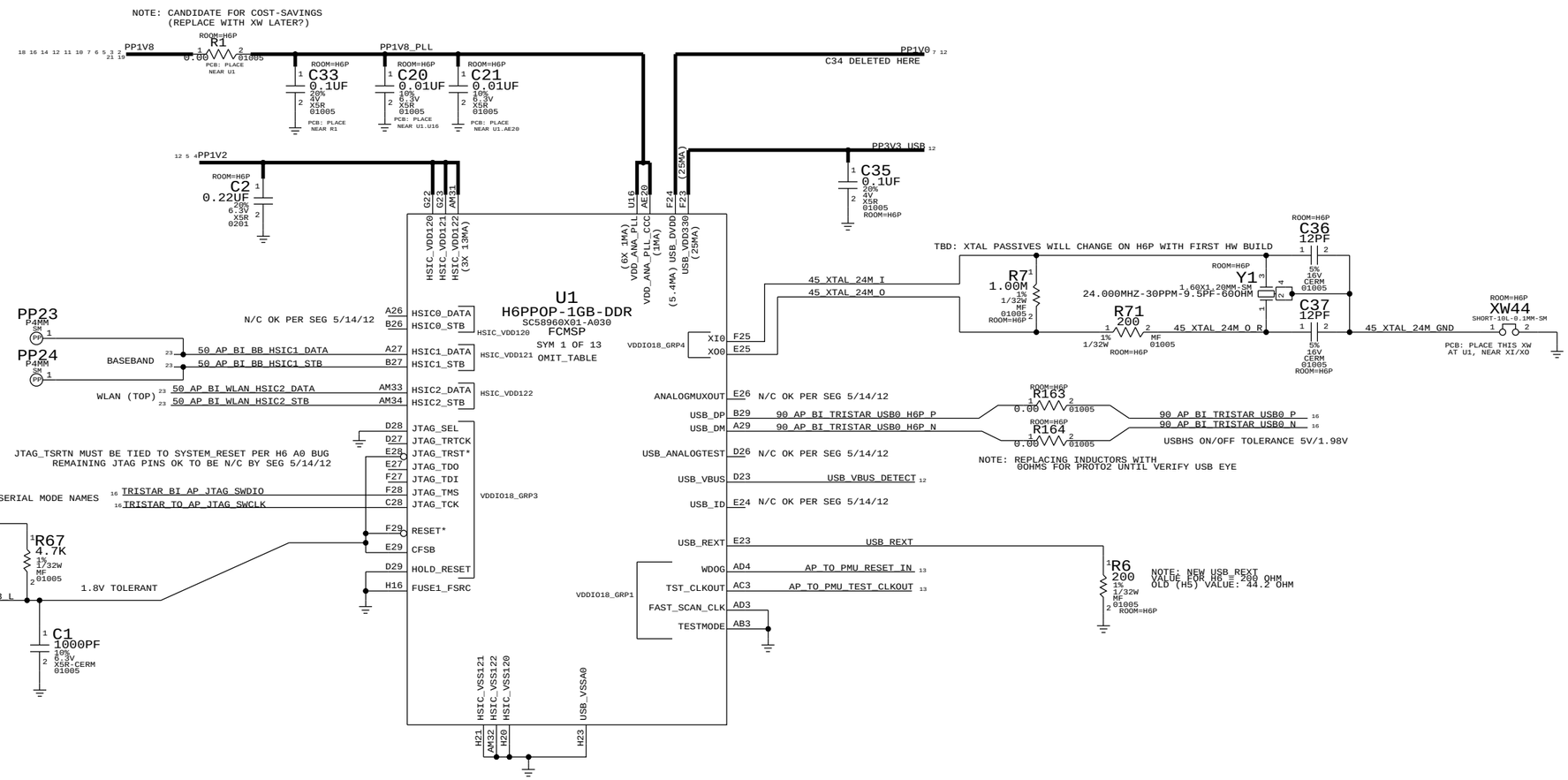

SYNC_MASTER=N/A	SYNC_DATE=N/A
PAGE TITLE: H6P JTAG,USB,PLL,HSIC,XTAL	
Apple Inc.	DRAWING NUMBER: 051-9681 SIZE: D
	REVISION: 1.0.0
NOTICE OF PROPRIETARY PROPERTY: THE INFORMATION CONTAINED HEREIN IS THE PROPRIETARY PROPERTY OF APPLE INC. THE POSESSOR AGREES TO THE FOLLOWING: I TO MAINTAIN THIS DOCUMENT IN CONFIDENCE II NOT TO REPRODUCE OR COPY IT III NOT TO REVEAL OR PUBLISH IT IN WHOLE OR PART IV ALL RIGHTS RESERVED	BRANCH
	PAGE: 2 OF 26
	SHEET: 2 OF 70

H6P: DIGITAL I/O, BOOTSTRAPPING

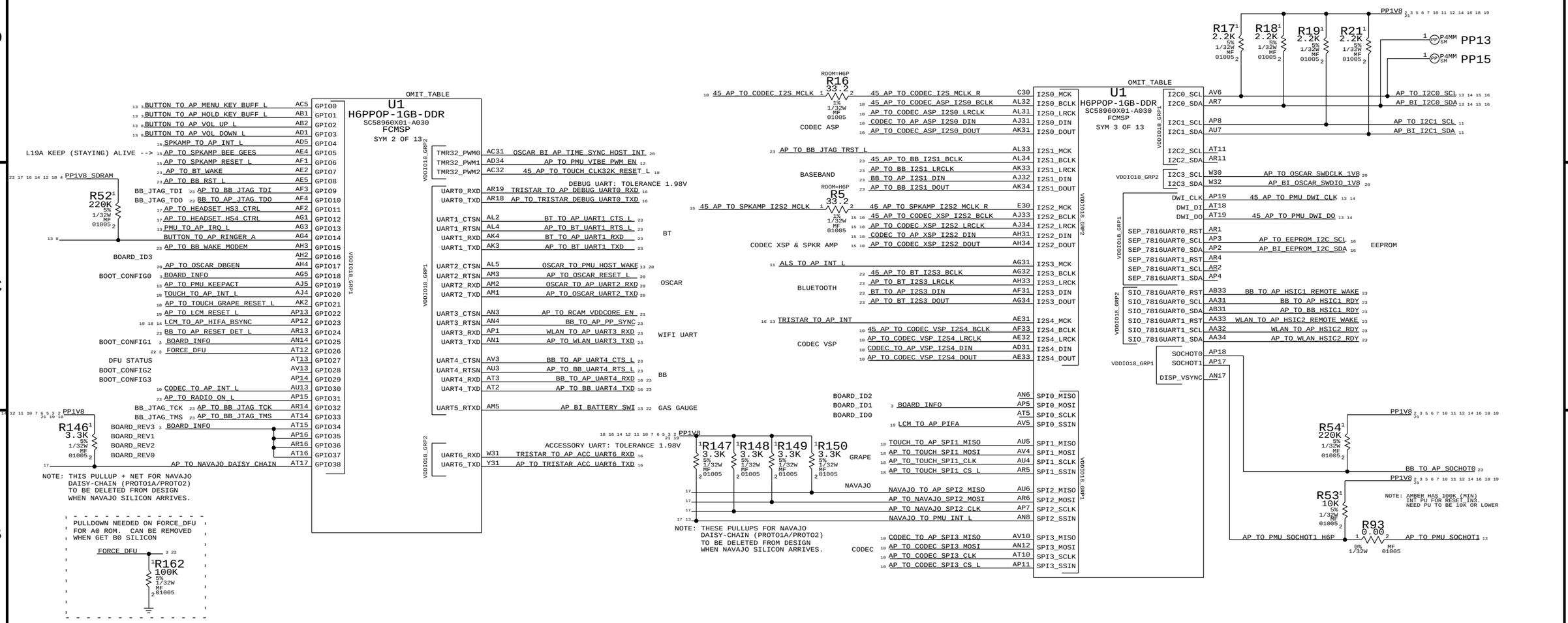

BOOTSTRAPPING (BOARD_REV, BOARD_ID, BOOT_CFG)

BOARD_REV[3:0]={GPIO37, GPIO36, GPIO35, GPIO34}

FLOAT=LOW, PULLUP=HIGH

1111	PROTO2, DEV1 <--- SELECTED
1110	?
1101	?
1100	?

COMMON PULL UP FOR BOARD_REV, BOARD_ID AND BOOT_CONFIG PINS

PP1V8 — R12 1.00K — BOARD_INFO

R12 MUST WIN OVER 6X INTERNAL PULL-DOWNS THAT ARE ~100K

BOARD_ID[3:0]={GPIO16, SPIO0_MISO, SPI0_MOSI, SPI0_SCLK}

FLOAT=LOW, PULLUP=HIGH

0000	X145 MLB
0001	X145 DEV
0010	X152 MLB <--- SELECTED
0011	X152 DEV

BOOT_CONFIG[3:0]={GPIO29_CONFIG3,GPIO28_CONFIG2,GPIO25_CONFIG1,GPIO18_CONFIG0}

FLOAT=LOW, PULLUP=HIGH

0000	SPI0
0001	SPI0 TEST MODE
0010	NAND
0011	NAND TEST MODE <--- SELECTED

MENU & POWER / HOLD KEY BUFFER

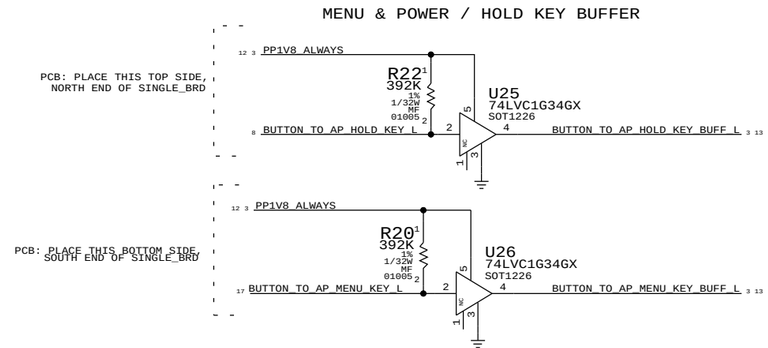

SYNC_MASTER=N/A	SYNC_DATE=N/A
PAGE TITLE	H6P DIGITAL I/O,BOOTSTRAPPING
Apple Inc.	DRAWING NUMBER 051-9681 SIZE D
	REVISION 1.0.0
	BRANCH
	PAGE 3 OF 26
	SHEET 3 OF 70

NOTICE OF PROPRIETARY PROPERTY:
THE INFORMATION CONTAINED HEREIN IS THE PROPRIETARY PROPERTY OF APPLE INC.
THE POSESSOR AGREES TO THE FOLLOWING:
I TO MAINTAIN THIS DOCUMENT IN CONFIDENCE
II NOT TO REPRODUCE OR COPY IT
III NOT TO REVEAL OR PUBLISH IT IN WHOLE OR PART
IV ALL RIGHTS RESERVED

H6P: GND, VDDCA, VDD1/2, VDD, VDD_CPU, VDD_GPU

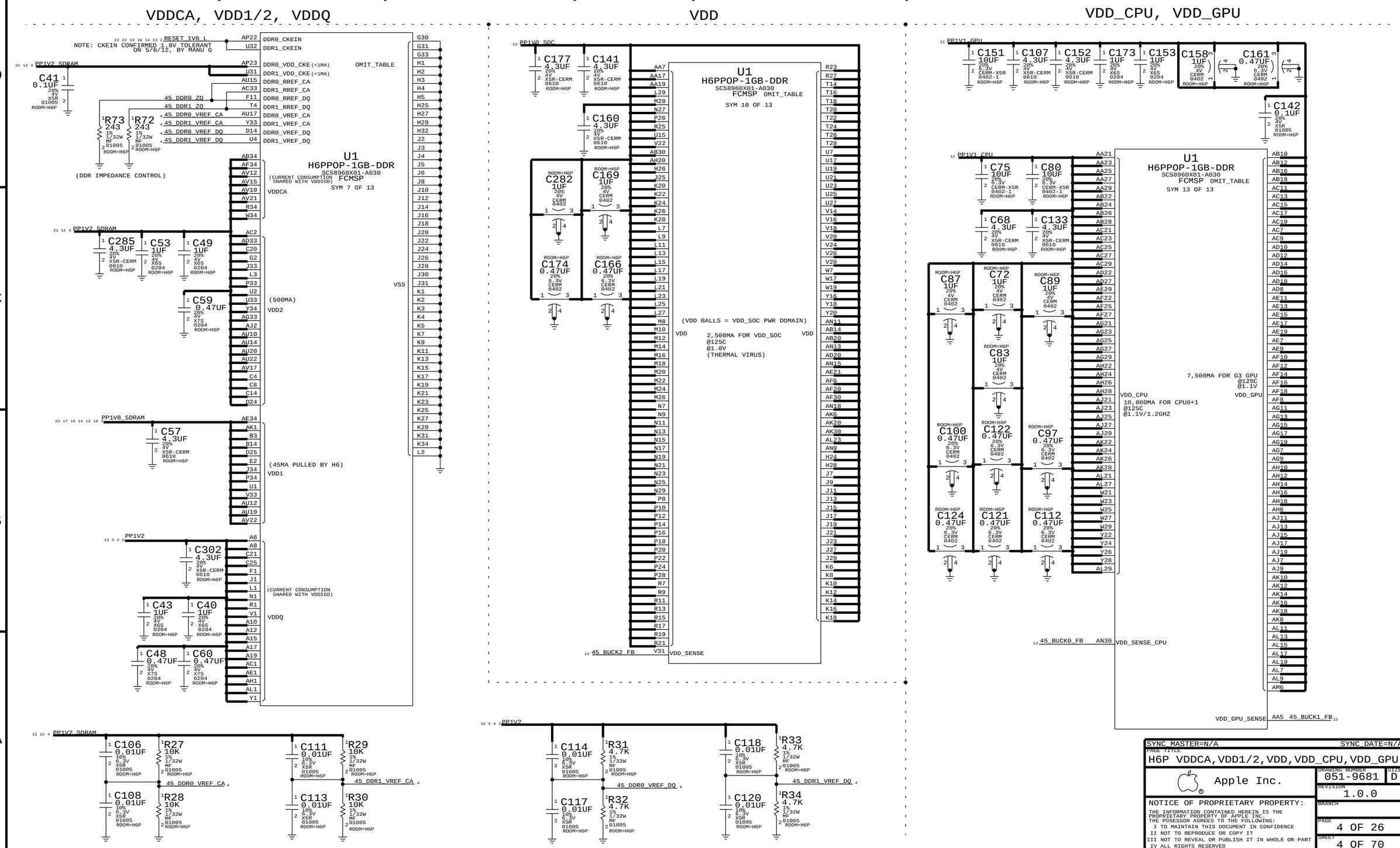

SYNC MASTER=N/A SYNC DATE=N/A

PAGE TITLE
H6P VDDCA,VDD1/2,VDD,VDD_CPU,VDD_GPU

Apple Inc.

DRAWING NUMBER 051-9681 SIZE D

REVISION 1.0.0

BRANCH

PAGE 4 OF 26

SHEET 4 OF 70

NOTICE OF PROPRIETARY PROPERTY:
THE INFORMATION CONTAINED HEREIN IS THE PROPRIETARY PROPERTY OF APPLE INC.
THE POSESSOR AGREES TO THE FOLLOWING:
I TO MAINTAIN THIS DOCUMENT IN CONFIDENCE
II NOT TO REPRODUCE OR COPY IT
III NOT TO REVEAL OR PUBLISH IT IN WHOLE OR PART
IV ALL RIGHTS RESERVED

H6P (GND, VDDIO18, VDDIOD, VDD_SRAM, VDD_SOC)

JUST A FEW GNDS

U1
H6PPOP-1GB-DDR
SC58960X01-A030
FCMSP
SYM 12 OF 13
OMIT_TABLE

AN32 AN33 AN34 AP6 AP20 AP21 AP24 AP25 AP26 AP27 AP28 AP29 AP30 AP31 AP32 AR3 AR8 AR12 AR15 AR17 AR20 AR21 AR22 AR23 AR24 AR25 AR28 AR29 AR32 AT1 AT4 AT6 AT20 AT21 AT22 AT23 AT24 AT25 AT26 AT27 AT28 AT29 AT30 AT31 AT32 AU1 AU2 AU11 AU16 AU18 AU21 AU33 AU34 AV1 AV2 AV9 AV11 AV14 AV16 AV18 AV20 AV33 AV34 B1 B2 B4 B5 B6 B7 B8 B9 B10 B11 B12 B13 B15 B16 B17 B18 B19 B25 B28 B30 B33 B34 C1 C2 C3 C5 C6 C7 C9

VSS

C10 C11 C12 C13 C15 C16 C17 C18 C19 C22 C23 C24 C26 C27 C29 C31 D1 D2 D3 D4 D5 D6 D7 D8 D9 D10 D11 D12 D13 D15 D16 D17 D18 D19 D20 D21 D22 D32 E1 E3 E4 E5 E6 E7 E8 E9 E10 E11 E12 E13 E14 E15 E18 E19 E20 E21 E22 E31 E32 E34 F2 F3 F4 F5 F6 F7 F8 F9 F10 F12 F13 F14 F15 F26 F30 F31 G1 G3 G4 G5 G6 G7 G8 G9 G10 G11 G12 G13 G14 G15 G26 G28

VSS

U1
H6PPOP-1GB-DDR
SC58960X01-A030
FCMSP
SYM 11 OF 13
OMIT_TABLE

A1 A2 A3 A4 A5 A7 A9 A11 A13 A14 A16 A18 A25 A28 A30 A33 A34 AA1 AA2 AA3 AA4 AA8 AA10 AA12 AA14 AA16 AA18 AA22 AA24 AA26 AA28 AA30 AB5 AB7 AB9 AB11 AB13 AB15 AB17 AB19 AB21 AB23 AB25 AB27 AB29 AB32 AC4 AC8 AC10 AC12 AC14 AC16 AC18 AC20 AC22 AC24 AC26 AC28 AC30 AC34 AD2 AD7 AD9 AD11 AD13 AD15 AD17 AD19 AD21 AD23 AD25 AD29 AD32 AE3 AE8 AE10 AE12 AE14 AE16 AE18 AE22 AE24 AE26 AE28 AF5 AF7 AF9 AF11 AF13 AF15 AF17 AF19

VSS

AF21 AF23 AF29 AF32 AG2 AG8 AG10 AG12 AG14 AG16 AG18 AG20 AG22 AG24 AG26 AG28 AG30 AH5 AH7 AH9 AH11 AH13 AH15 AH17 AH19 AH21 AH23 AH25 AH27 AH29 AH32 AJ1 AJ3 AJ8 AJ10 AJ12 AJ14 AJ16 AJ18 AJ22 AJ24 AJ26 AJ28 AJ30 AK5 AK7 AK9 AK11 AK13 AK15 AK17 AK19 AK21 AK23 AK27 AK29 AK32 AL3 AL6 AL8 AL10 AL12 AL14 AL16 AL18 AL20 AL22 AL24 AL26 AL28 AL30 AM4 AM7 AM18 AM30 AN2 AN5 AN7 AB6 AM9 AM11 AM13 AN16 AM15 AN19 AN20 AN21 AN22 AN23 AN24 AN31

VDDIOD, VDDIO18

12 4 2 PP1V2

CAPS FOR VDDIOD ARE SHARED WITH VDDQ

AM20 AM21 AM22 AM23 AM24 — VDDIOD_DDR0CA

R29 T29 U29 V29 — VDDIOD_DDR1CA

OMIT_TABLE
U1
H6PPOP-1GB-DDR
SC58960X01-A030
FCMSP
SYM 9 OF 13

AA6 H6 H7 H8 H9 H10 H11 H12 H13 H14 H15 M6 N6 P6 R6 T6 U6 V6 W6 Y6 — VDDIOD_DDRDQ (1000MA)

R33 T1 T2 T3 T5 T7 T9 T11 T13 T15 T17 T19 T21 T23 T25 T27 T30 T31 T32 T33 T34 U3 U5 U8 U10 U12 U14 U18 U20 U22 U24 U26 U28 U30 U34 V2 V3 V4 V5 V7 V9 V11 V13 V15 V17 V19 V21 V23 V25 V27 V30 V32 V34 W1 W2 W3 W4 W5 W8 W10 W12 W14 W16 W18 W20 W22 W24 W26 W28 W33 Y2 Y3 Y4 Y5 Y7 Y9 Y11 Y13 Y15 Y17 Y19 Y21 Y23 Y27 Y29 Y32 AM17 Y30 AC6 AE6 AG6 AJ6 AE30

VSS

CAPS FOR VDDIO18_X ARE SHARED WITH VDDIODX

14 12 11 10 7 6 5 3 2 21 19 18 16 PP1V8

C30 4.3UF 20% 4V X5R-CERM 0610 ROOM=H6P
C78 1UF 20% 4V X6S 0204 ROOM=H6P
C86 1UF 20% 4V X6S 0204 ROOM=H6P
C95 0.47UF 20% 4V X7S 0204 ROOM=H6P

AD6 AH6 AM8 AM10 AM12 AM14 AM16 AM19 — VDDIO18_GRP1 (65MA) (GPIO,UART,SPI,I2C) (SENSOR,SOCHOT,PMU)

AD30 AH30 — VDDIO18_GRP2 (20MA) (I2S,TMR,SIO,GPIO,UART)

G25 G27 H30 K30 M30 P30 G29 — VDDIO18_GRP3 (31MA) (PPN,GPIO,JTAG)

ROOM=H6P
FL67
1KOHM-25%-0.2A
0201

PP1V8_XTAL G24 — VDDIO18_GRP4 (2MA) (XTAL I/O)

C379 1.0UF 20% 10V X5R-CERM 0201-1 ROOM=H6P

VDD_SRAM, VDD_SOC

U1
H6PPOP-1GB-DDR
SC58960X01-A030
FCMSP
SYM 8 OF 13
OMIT_TABLE

L4 L5 L6 L8 L10 L12 L14 L16 L18 L20 L22 L24 L26 L28 L30 L33 M1 M2 M3 M4 M5 M7 M9 M11 M13 M15 M17 M19 M21 M23 M25 M27 M29 M31 N2 N3 N4 N5 N8 N10 N12 N14 N16 N18 N20 N22 N24 N26 N28 N30 N33 P1 P2 P3 P4 P5 P7 P9 P11 P13 P15 P17 P19 P21 P23 P25 P27 P29 R2 R3 R4 R5 R8 R10 R12 R14 R16 R18 R20 R22 R24 R26 R28 R30 R31

VSS

12 PP1V8_SRAM

C305 4.3UF 20% 4V X5R-CERM 0610 ROOM=H6P
C81 1UF 20% 4V X6S 0204 ROOM=H6P
C115 1UF 20% 4V X6S 0204 ROOM=H6P
C91 0.47UF 20% 4V X7S 0204 ROOM=H6P
C134 0.47UF 20% 4V X7S 0204 ROOM=H6P

AD24 AD26 AD28 AE23 AE25 AE27 AE24 AF26 AF28 AK25 Y25 — VDD_SRAM_CPU 1,500MA FOR CYCLONE + M$ SRAM @125C @1.0V

AA9 AA11 AA13 AA15 AB8 T8 T10 T12 U9 U11 U13 V8 V10 V12 W9 W11 W13 W15 Y8 Y10 Y12 Y14 — VDD_SRAM_SOC (1500MA)

16 14 12 11 10 7 6 5 3 2 21 19 18 PP1V8

C85 0.1UF 20% 4V X5R 01005 ROOM=H6P

AJ20 — VDD_ANA_TMPSADC0(2.5MA)
AA20 — VDD_ANA_TMPSADC1(2.5MA)
AB4 — VDD_ANA_TMPSADC2(2.5MA)
H22 — VDD_ANA_TMPSADC3(2.5MA)

SYNC_MASTER=N/A	SYNC_DATE=N/A
PAGE TITLE: H6P GND,VDDIO18,VDDIOD,VDD_SRAM,VDD_SOC	
Apple Inc.	DRAWING NUMBER: 051-9681 SIZE: D
	REVISION: 1.0.0
NOTICE OF PROPRIETARY PROPERTY: THE INFORMATION CONTAINED HEREIN IS THE PROPRIETARY PROPERTY OF APPLE INC. THE POSESSOR AGREES TO THE FOLLOWING: I TO MAINTAIN THIS DOCUMENT IN CONFIDENCE II NOT TO REPRODUCE OR COPY IT III NOT TO REVEAL OR PUBLISH IT IN WHOLE OR PART IV ALL RIGHTS RESERVED	BRANCH
	PAGE: 5 OF 26
	SHEET: 5 OF 70

H6P NAND + 12X17 NAND PKG

SUPPORT FOR PPN1.5 (1.8V IO) ONLY

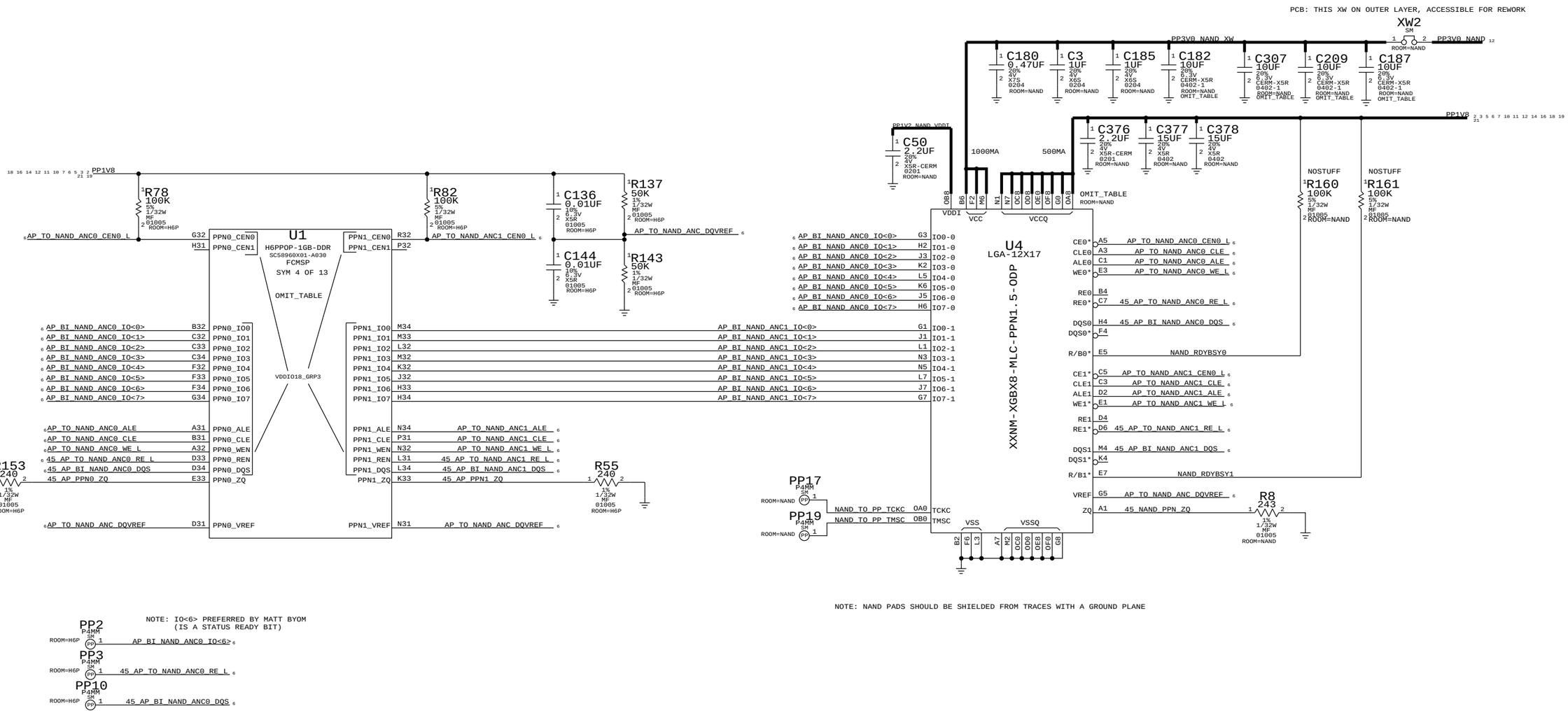

SYNC_MASTER=N/A SYNC_DATE=N/A

PAGE TITLE
H6P NAND,NAND 12X17

Apple Inc.

DRAWING NUMBER 051-9681 SIZE D

REVISION 1.0.0

BRANCH

PAGE 6 OF 26

SHEET 6 OF 70

NOTICE OF PROPRIETARY PROPERTY:
THE INFORMATION CONTAINED HEREIN IS THE PROPRIETARY PROPERTY OF APPLE INC.
THE POSESSOR AGREES TO THE FOLLOWING:
I TO MAINTAIN THIS DOCUMENT IN CONFIDENCE
II NOT TO REPRODUCE OR COPY IT
III NOT TO REVEAL OR PUBLISH IT IN WHOLE OR PART
IV ALL RIGHTS RESERVED

H6P HIGH SPEED DIG (CAM, LCD, DP)

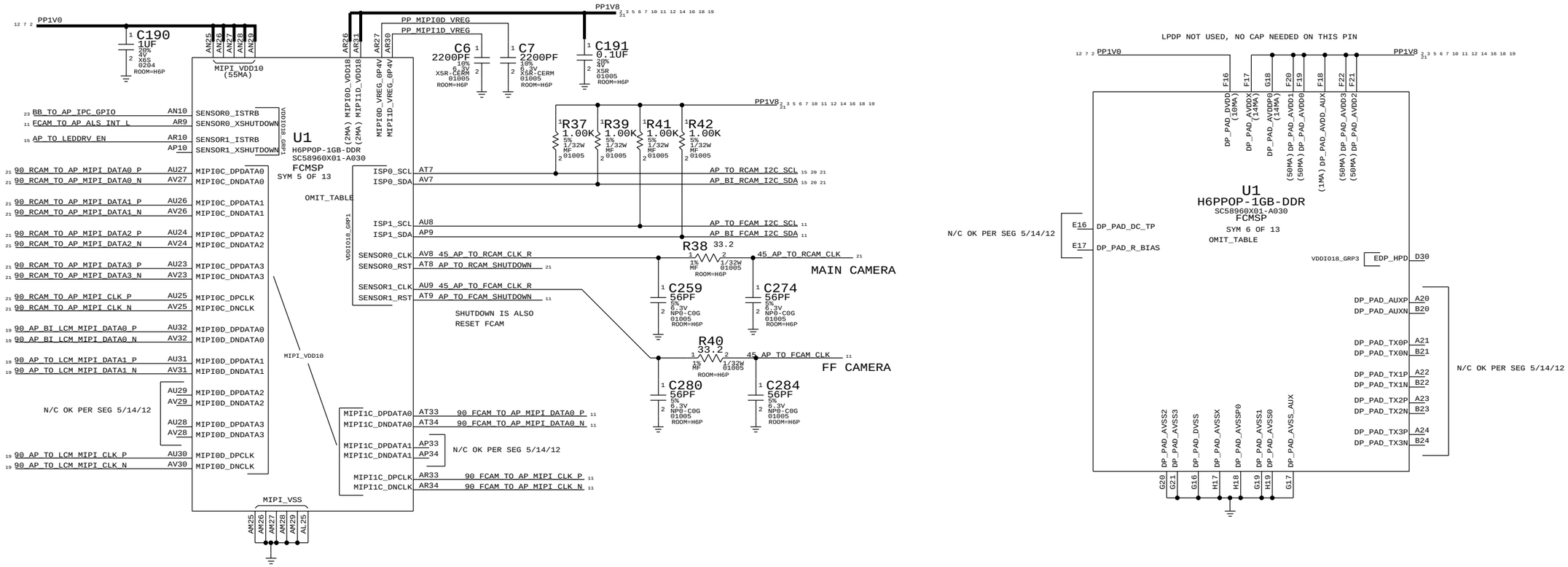

SYNC_MASTER=N/A	SYNC_DATE=N/A
PAGE TITLE: H6P HIGH SPEED DIG (CAM,LCM,DP)	
Apple Inc.	DRAWING NUMBER: 051-9681 SIZE: D
	REVISION: 1.0.0
NOTICE OF PROPRIETARY PROPERTY: THE INFORMATION CONTAINED HEREIN IS THE PROPRIETARY PROPERTY OF APPLE INC. THE POSESSOR AGREES TO THE FOLLOWING: I TO MAINTAIN THIS DOCUMENT IN CONFIDENCE II NOT TO REPRODUCE OR COPY IT III NOT TO REVEAL OR PUBLISH IT IN WHOLE OR PART IV ALL RIGHTS RESERVED	BRANCH
	PAGE: 7 OF 26
	SHEET: 7 OF 70

BUTTON FLEX (VIBE DRIVER, BUTTONS, ANC REF MIC, STROBE, STROBE_NTC)

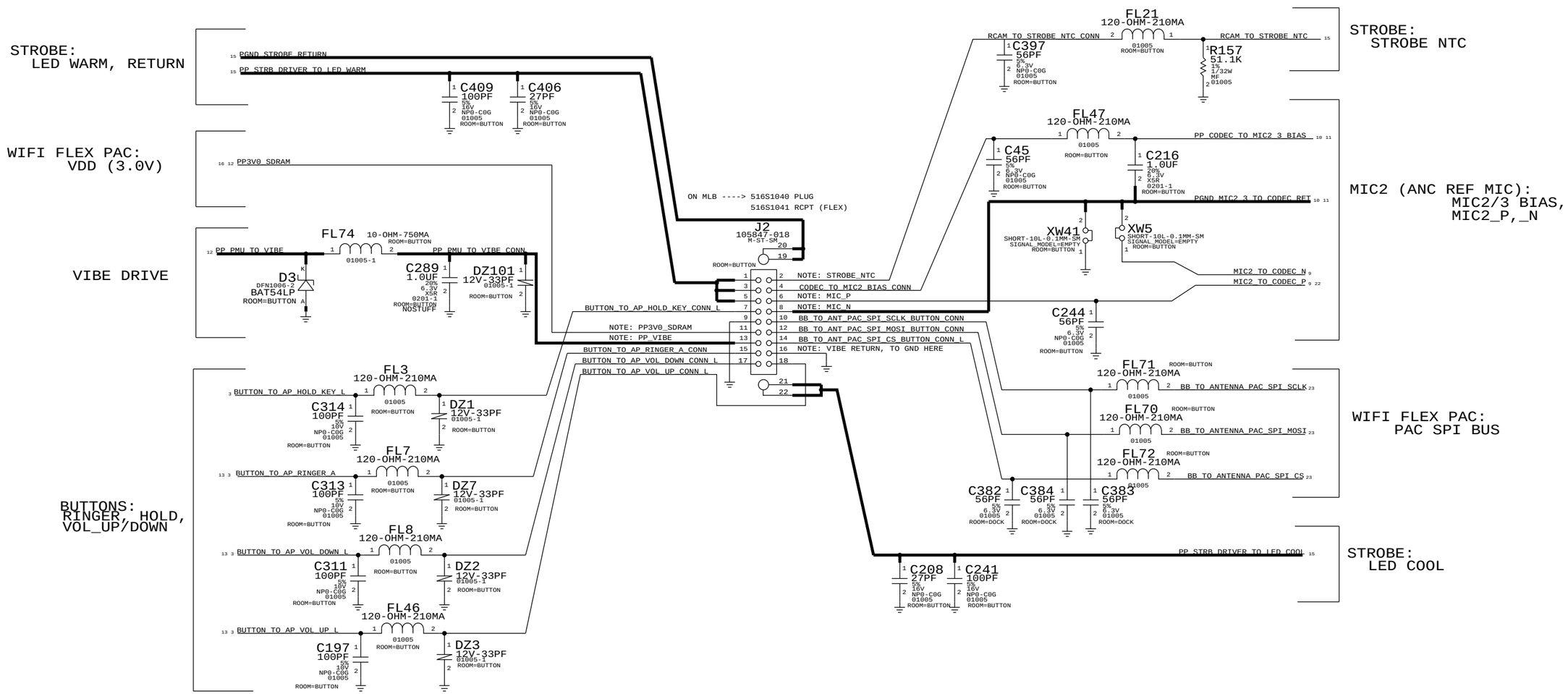

SYNC_MASTER=N/A SYNC_DATE=N/A

PAGE TITLE
BUTTON FLEX B2B

Apple Inc.

DRAWING NUMBER 051-9681 SIZE D

REVISION 1.0.0

BRANCH

PAGE 8 OF 26

SHEET 8 OF 70

NOTICE OF PROPRIETARY PROPERTY:
THE INFORMATION CONTAINED HEREIN IS THE PROPRIETARY PROPERTY OF APPLE INC.
THE POSESSOR AGREES TO THE FOLLOWING:
I TO MAINTAIN THIS DOCUMENT IN CONFIDENCE
II NOT TO REPRODUCE OR COPY IT
III NOT TO REVEAL OR PUBLISH IT IN WHOLE OR PART
IV ALL RIGHTS RESERVED

L67 AUDIO CODEC

AUDIO I/O

(ANALOG MIC IN, DIG MIC IN, HPOUT, LINEOUT, RECEIVER OUT, MIKEYBUS)

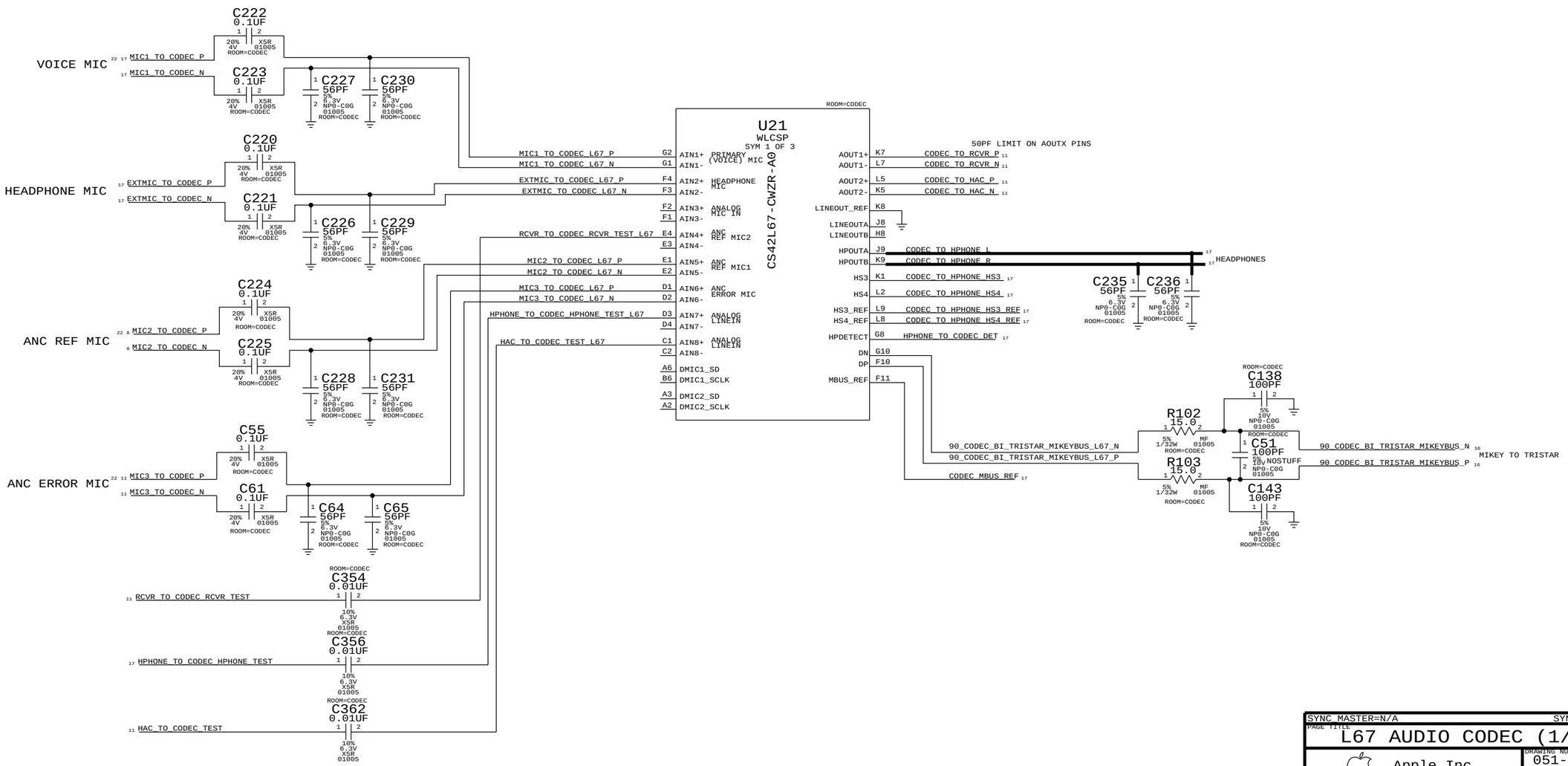

SYNC_MASTER=N/A SYNC_DATE=N/A

PAGE TITLE
L67 AUDIO CODEC (1/2)

Apple Inc.

DRAWING NUMBER 051-9681 SIZE D

REVISION 1.0.0

BRANCH

PAGE 9 OF 26

SHEET 9 OF 70

NOTICE OF PROPRIETARY PROPERTY:
THE INFORMATION CONTAINED HEREIN IS THE PROPRIETARY PROPERTY OF APPLE INC.
THE POSESSOR AGREES TO THE FOLLOWING:
I TO MAINTAIN THIS DOCUMENT IN CONFIDENCE
II NOT TO REPRODUCE OR COPY IT
III NOT TO REVEAL OR PUBLISH IT IN WHOLE OR PART
IV ALL RIGHTS RESERVED

L67 AUDIO CODEC

POWER, MICBIAS

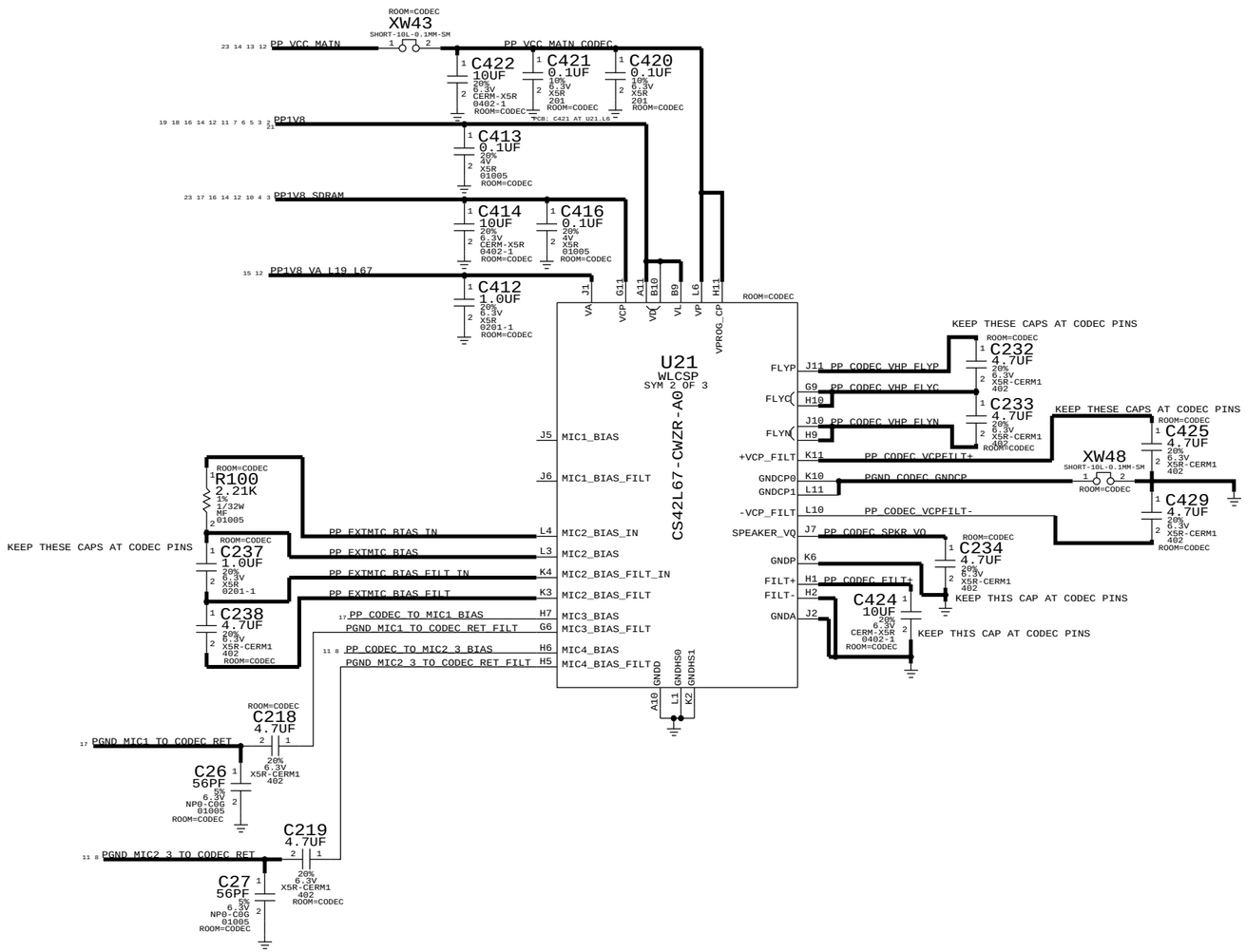

DIGITAL SYSTEM I/O

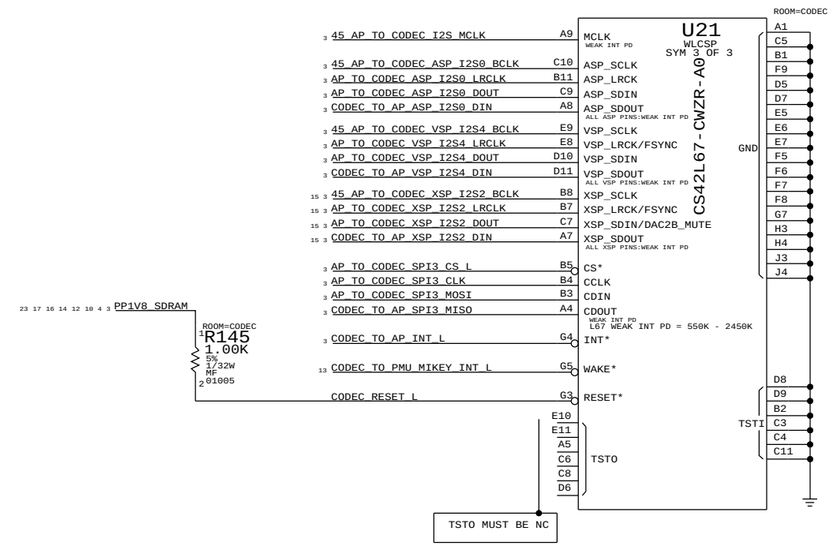

SYNC MASTER=N/A	SYNC DATE=N/A
PAGE TITLE: L67 AUDIO CODEC (2/2)	
Apple Inc.	DRAWING NUMBER: 051-9681 SIZE: D
	REVISION: 1.0.0
NOTICE OF PROPRIETARY PROPERTY:	BRANCH
THE INFORMATION CONTAINED HEREIN IS THE PROPRIETARY PROPERTY OF APPLE INC. THE POSESSOR AGREES TO THE FOLLOWING: I TO MAINTAIN THIS DOCUMENT IN CONFIDENCE II NOT TO REPRODUCE OR COPY IT III NOT TO REVEAL OR PUBLISH IT IN WHOLE OR PART IV ALL RIGHTS RESERVED	PAGE: 10 OF 26
	SHEET: 10 OF 70

FRONT CAM FLEX B2B (FCAM, PROX, ALS, RECEIVER, ANC ERROR MIC)

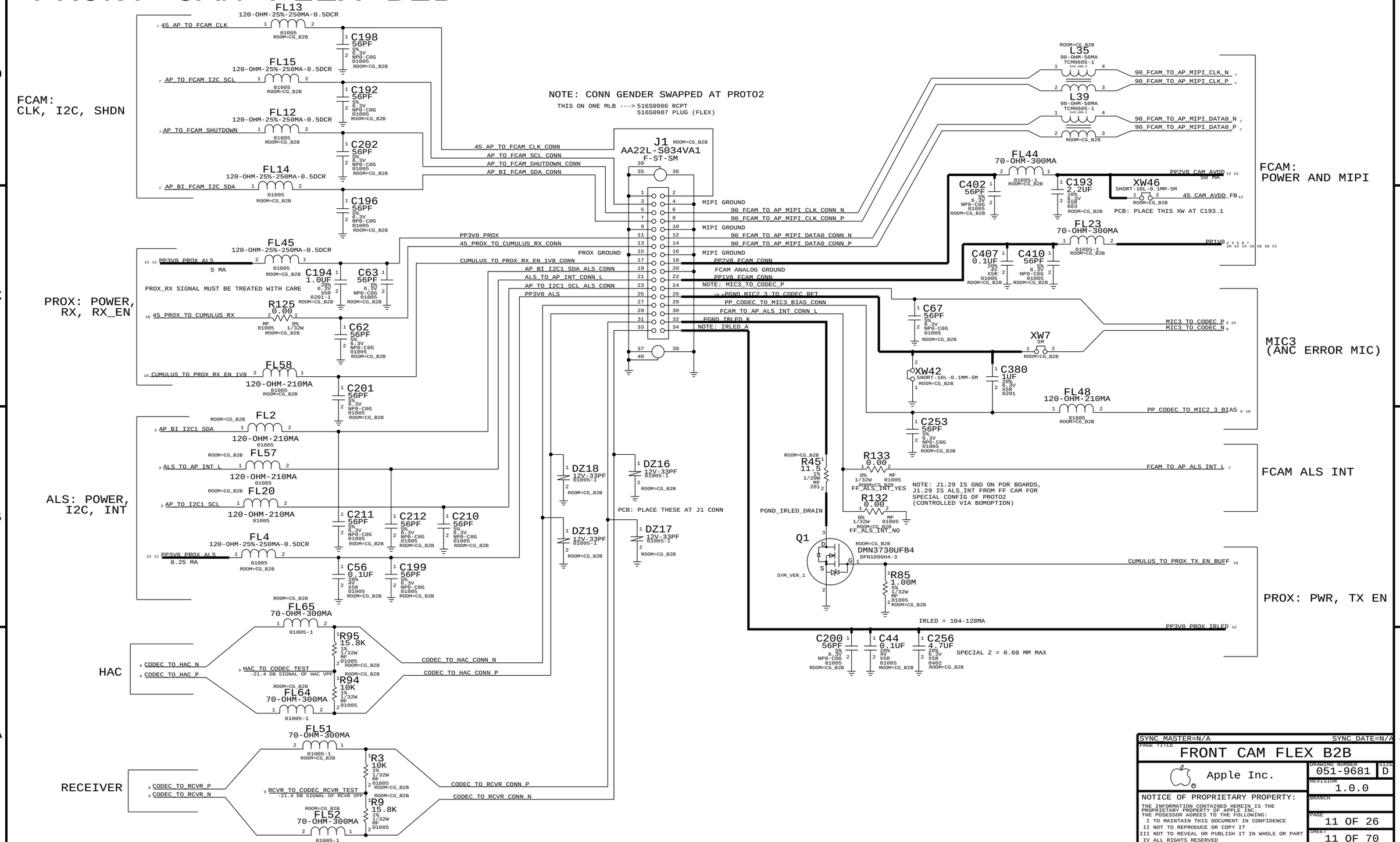

SYNC_MASTER=N/A SYNC_DATE=N/A

PAGE TITLE: FRONT CAM FLEX B2B

Apple Inc.

DRAWING NUMBER: 051-9681 SIZE: D

REVISION: 1.0.0

BRANCH:

PAGE: 11 OF 26

SHEET: 11 OF 70

NOTICE OF PROPRIETARY PROPERTY:
THE INFORMATION CONTAINED HEREIN IS THE PROPRIETARY PROPERTY OF APPLE INC.
THE POSESSOR AGREES TO THE FOLLOWING:
I TO MAINTAIN THIS DOCUMENT IN CONFIDENCE
II NOT TO REPRODUCE OR COPY IT
III NOT TO REVEAL OR PUBLISH IT IN WHOLE OR PART
IV ALL RIGHTS RESERVED

AMBER PMU

(BUCK, LDO, VIBE DRIVER, 32K, CHARGER)

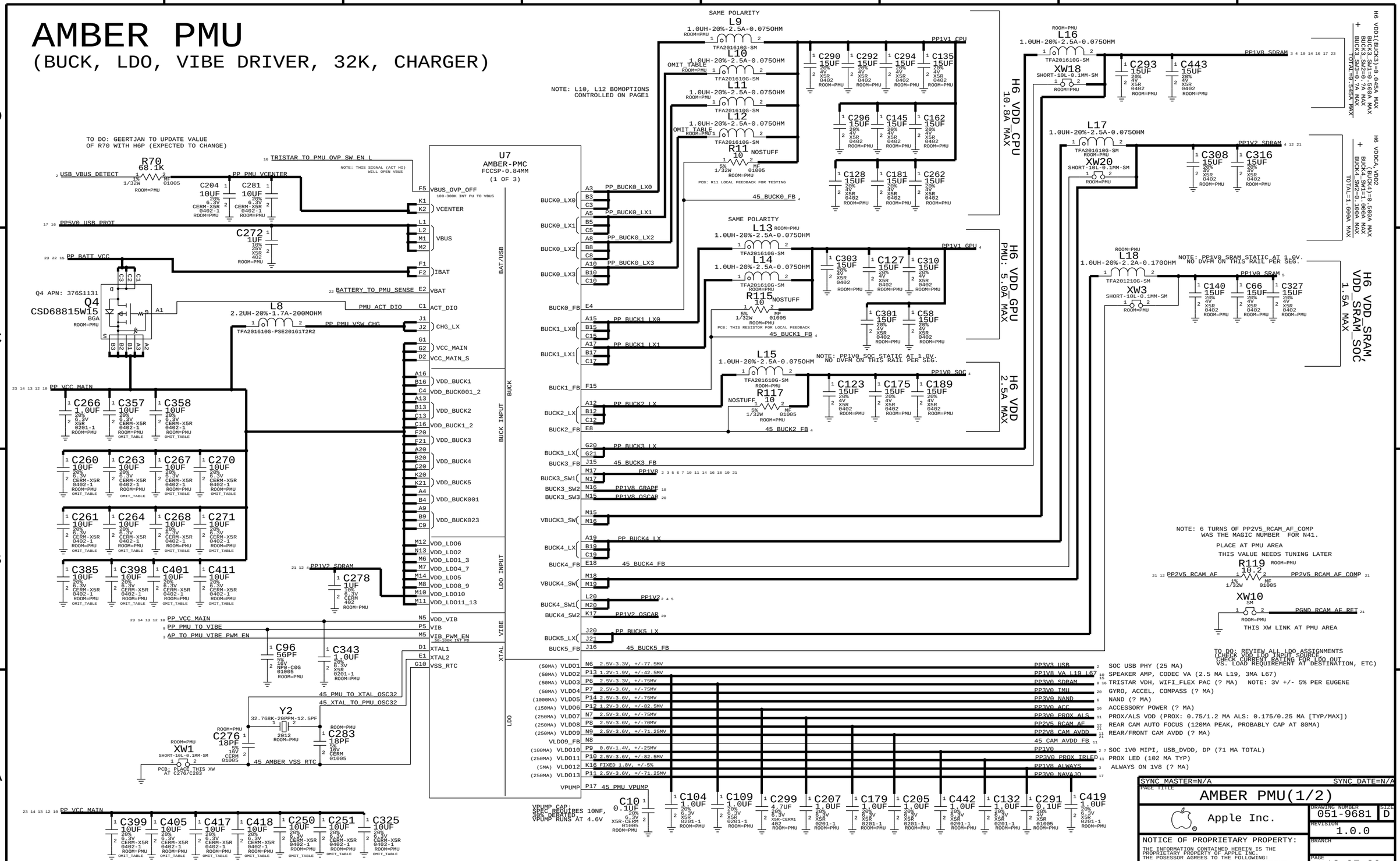

AMBER PMU

(AMUX, GPIO, BUTTONS, ADC, THERMISTORS, SYSTEM I/F, GND)

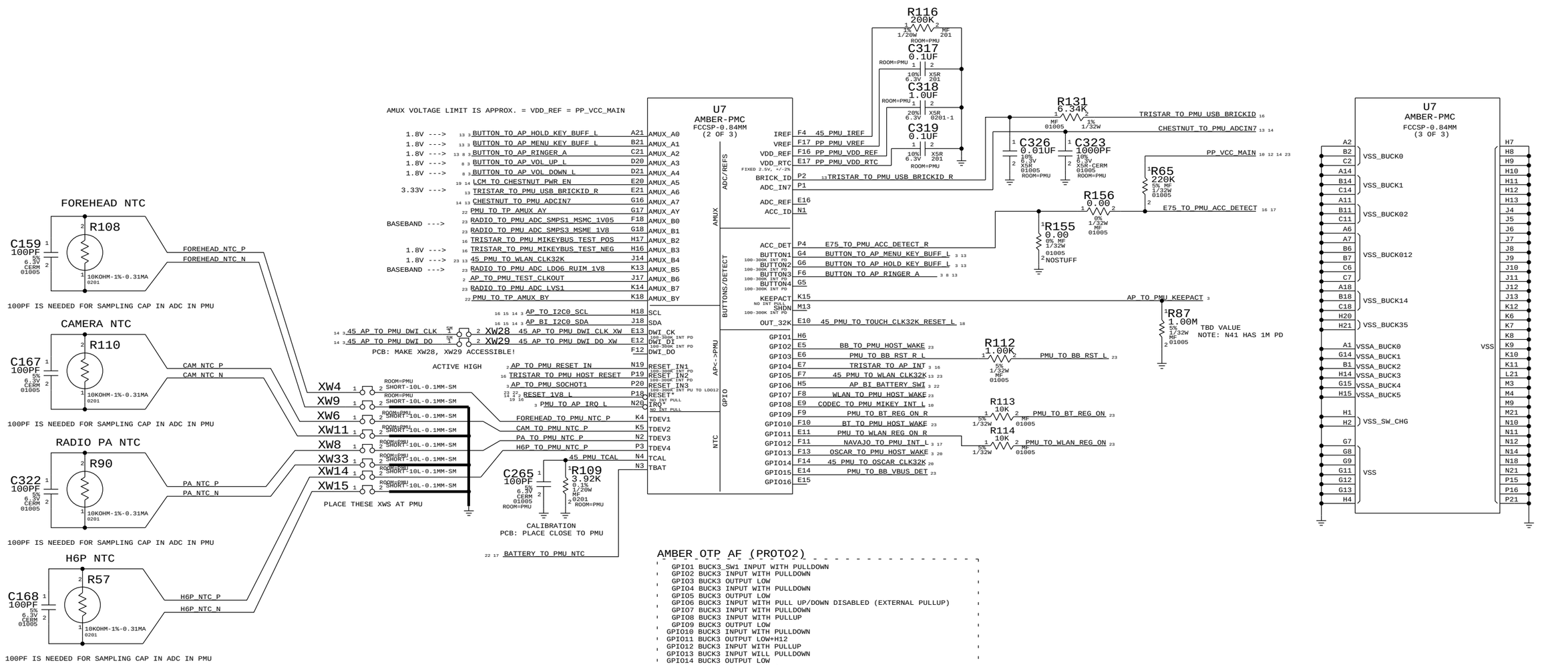

SYNC_MASTER=N/A SYNC_DATE=N/A

PAGE TITLE: AMBER PMU(2/2)

Apple Inc.

DRAWING NUMBER: 051-9681 SIZE: D

REVISION: 1.0.0

BRANCH

PAGE: 13 OF 26

SHEET: 13 OF 70

NOTICE OF PROPRIETARY PROPERTY:

THE INFORMATION CONTAINED HEREIN IS THE PROPRIETARY PROPERTY OF APPLE INC.
THE POSESSOR AGREES TO THE FOLLOWING:
I TO MAINTAIN THIS DOCUMENT IN CONFIDENCE
II NOT TO REPRODUCE OR COPY IT
III NOT TO REVEAL OR PUBLISH IT IN WHOLE OR PART
IV ALL RIGHTS RESERVED

CHESTNUT, BACKLIGHT DRIVER, MESA BOOST

D403 DISPLAY PMU (INTERSIL CHESTNUT, 338S1148) (TI CHESTNUT, 338S1149)

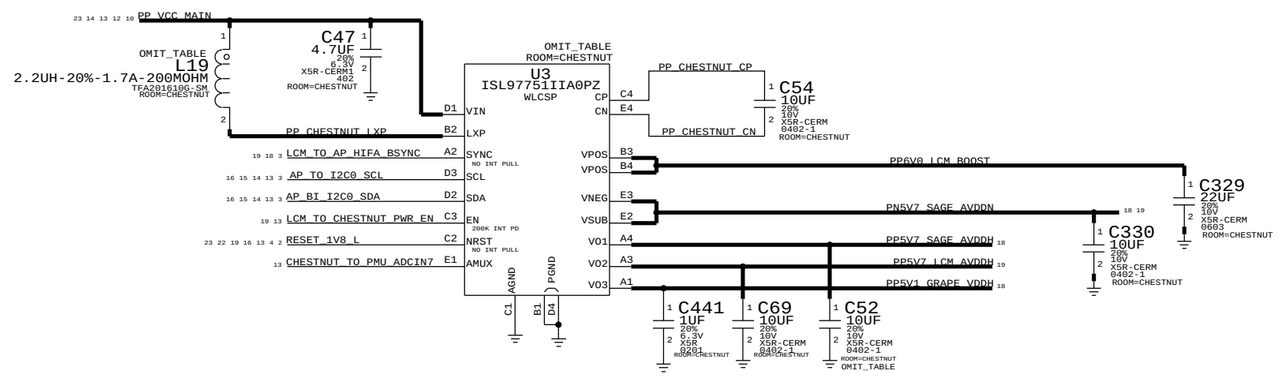

SAGE NEG BOOST TIMING INFO:

2 MS NOMIAL START UP DELAY FOR LCM POWER SEQUENCING
0 MS DELAY AT SHUTDOWN
ACTIVE DISCHARGE 2MS TO RAIL DOWN

D403 BACKLIGHT DRIVER

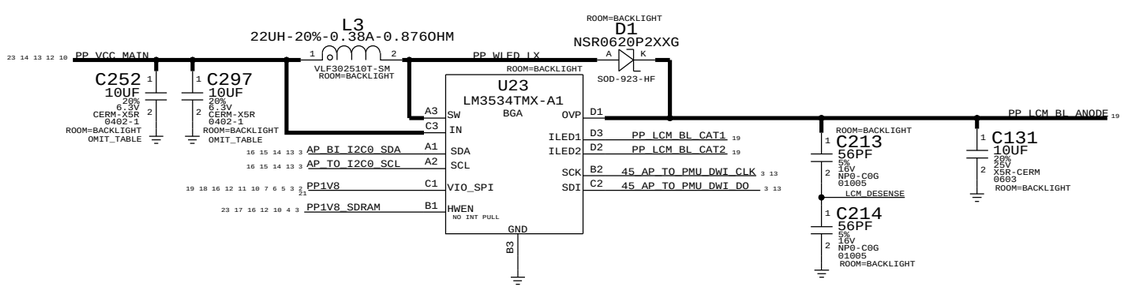

NOTE: STACKED TO MEET VOLTAGE REQ, LOOK INTO 18+V CAPS

MESA BOOST

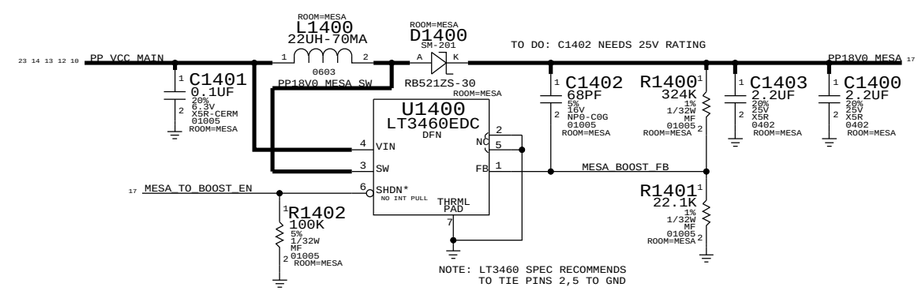

NOTE: LT3460 SPEC RECOMMENDS TO TIE PINS 2,5 TO GND

SYNC_MASTER=N/A	SYNC_DATE=N/A
PAGE TITLE: CHESTNUT,BACKLIGHT DRIVER,MESA BOOST	
Apple Inc.	DRAWING NUMBER: 051-9681 SIZE: D
	REVISION: 1.0.0
NOTICE OF PROPRIETARY PROPERTY:	BRANCH
THE INFORMATION CONTAINED HEREIN IS THE PROPRIETARY PROPERTY OF APPLE INC. THE POSESSOR AGREES TO THE FOLLOWING: I TO MAINTAIN THIS DOCUMENT IN CONFIDENCE II NOT TO REPRODUCE OR COPY IT III NOT TO REVEAL OR PUBLISH IT IN WHOLE OR PART IV ALL RIGHTS RESERVED	PAGE: 14 OF 26
	SHEET: 14 OF 70

SPEAKER AMP, LED DRIVER

SPEAKER AMP (TO BE REPLACED WITH L20)

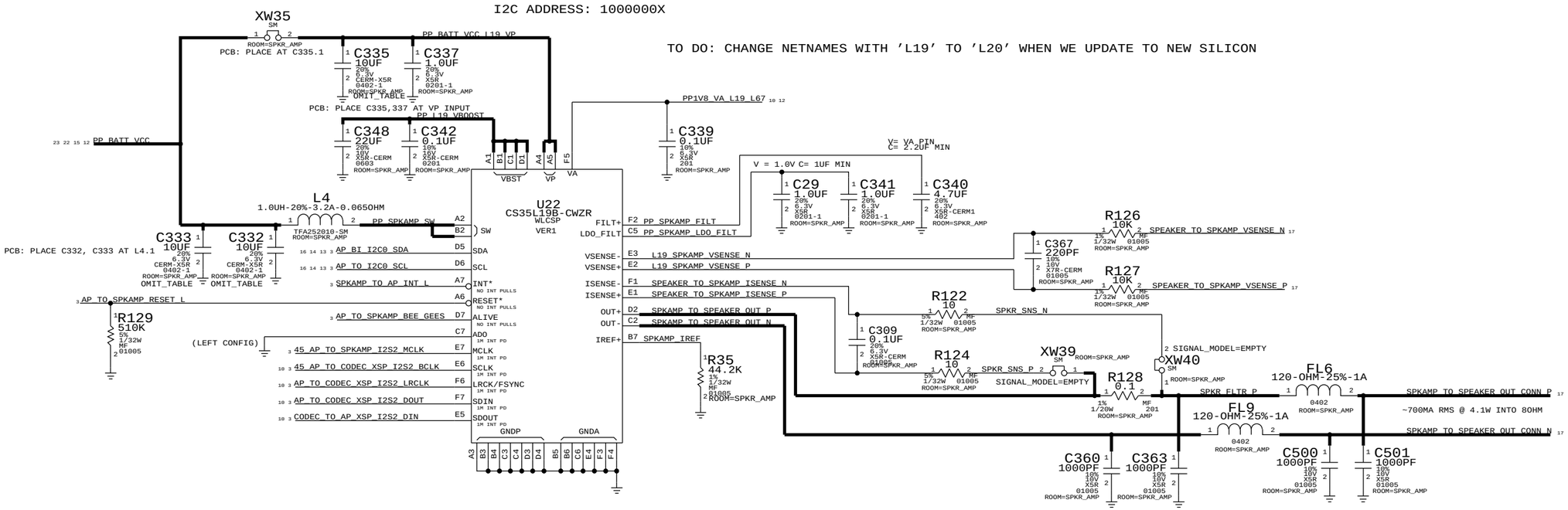

STROBE DRIVER (OPEL)

TI: APN 353S3899
FAIRCHILD: APN 353S3839

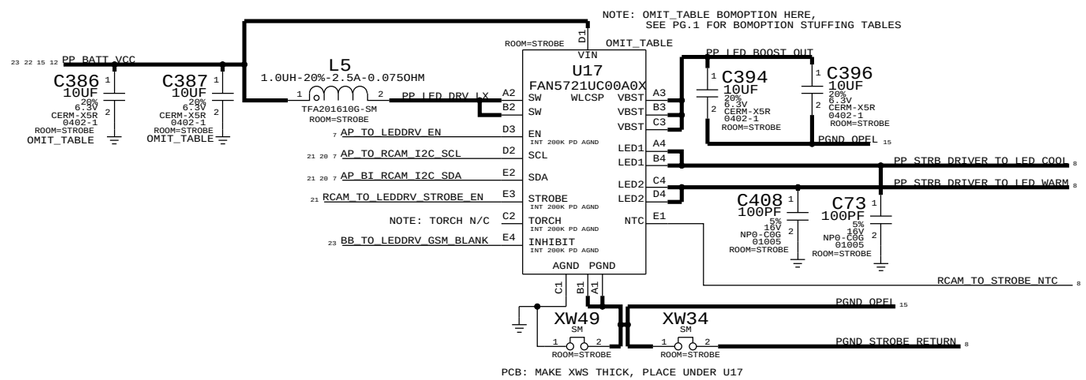

SYNC_MASTER=N/A	SYNC_DATE=N/A
PAGE TITLE: SPKR AMP + STROBE DRIVER	
Apple Inc.	DRAWING NUMBER: 051-9681 SIZE: D
	REVISION: 1.0.0
	BRANCH
	PAGE: 15 OF 26
	SHEET: 15 OF 70

NOTICE OF PROPRIETARY PROPERTY:
THE INFORMATION CONTAINED HEREIN IS THE PROPRIETARY PROPERTY OF APPLE INC.
THE POSESSOR AGREES TO THE FOLLOWING:
I TO MAINTAIN THIS DOCUMENT IN CONFIDENCE
II NOT TO REPRODUCE OR COPY IT
III NOT TO REVEAL OR PUBLISH IT IN WHOLE OR PART
IV ALL RIGHTS RESERVED

TRISTAR

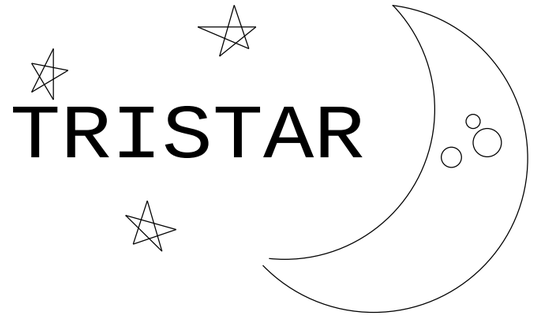

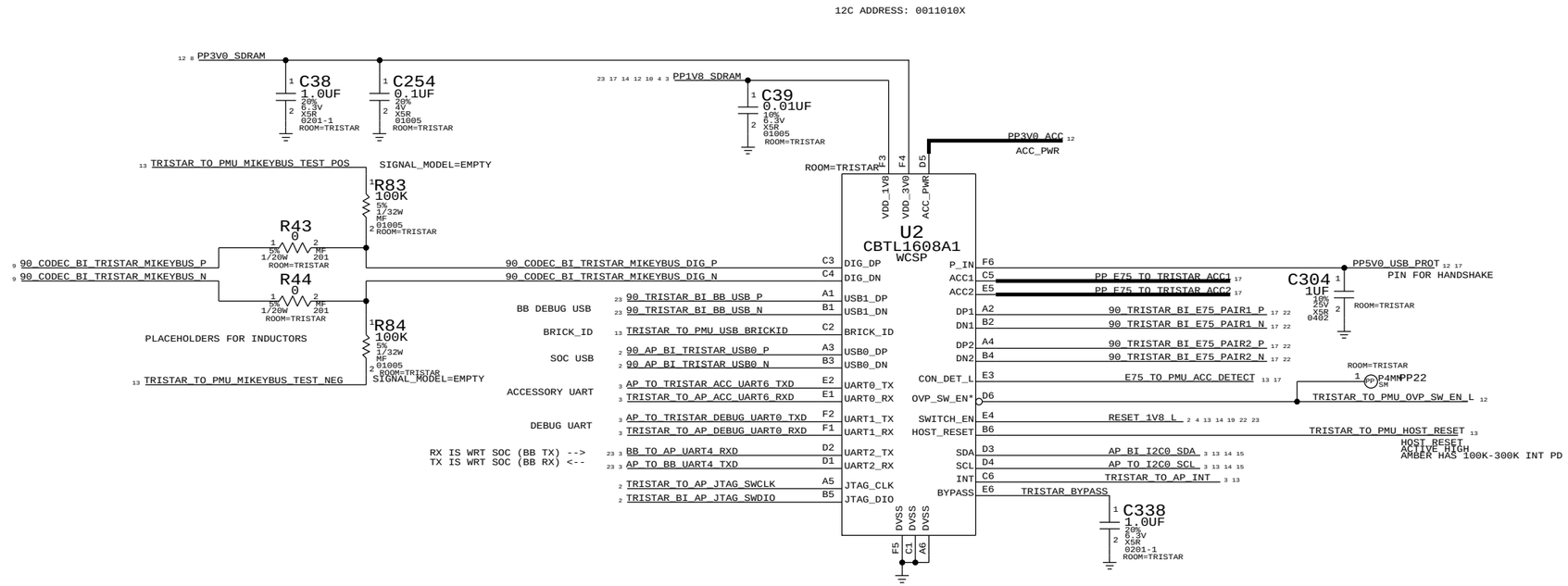

EEPROM

ONSEMI EEPROM
APN:335S0894

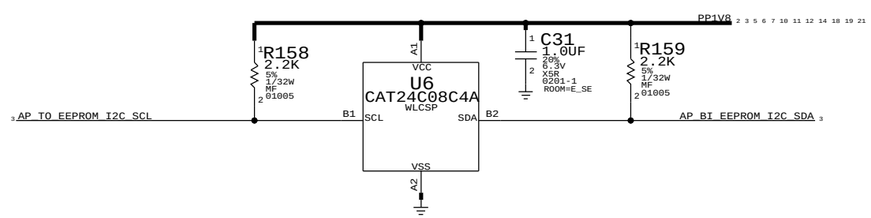

SYNC_MASTER=N/A	SYNC_DATE=N/A
PAGE TITLE: TRISTAR,EEPROM	
Apple Inc.	DRAWING NUMBER: 051-9681 SIZE: D
	REVISION: 1.0.0
NOTICE OF PROPRIETARY PROPERTY:	BRANCH
THE INFORMATION CONTAINED HEREIN IS THE PROPRIETARY PROPERTY OF APPLE INC. THE POSESSOR AGREES TO THE FOLLOWING: I TO MAINTAIN THIS DOCUMENT IN CONFIDENCE II NOT TO REPRODUCE OR COPY IT III NOT TO REVEAL OR PUBLISH IT IN WHOLE OR PART IV ALL RIGHTS RESERVED	PAGE: 16 OF 26
	SHEET: 16 OF 70

DOCKFLEX B2B (USB VBUS, MENU BTN, SPEAKER, HP, HP EXTMIC, NAVAJO, ANTENNA LAT SW CTRL, MIC1 (PRIMARY MIC), ACC DET/ID/PWR, E75 DIFFPAIRS)

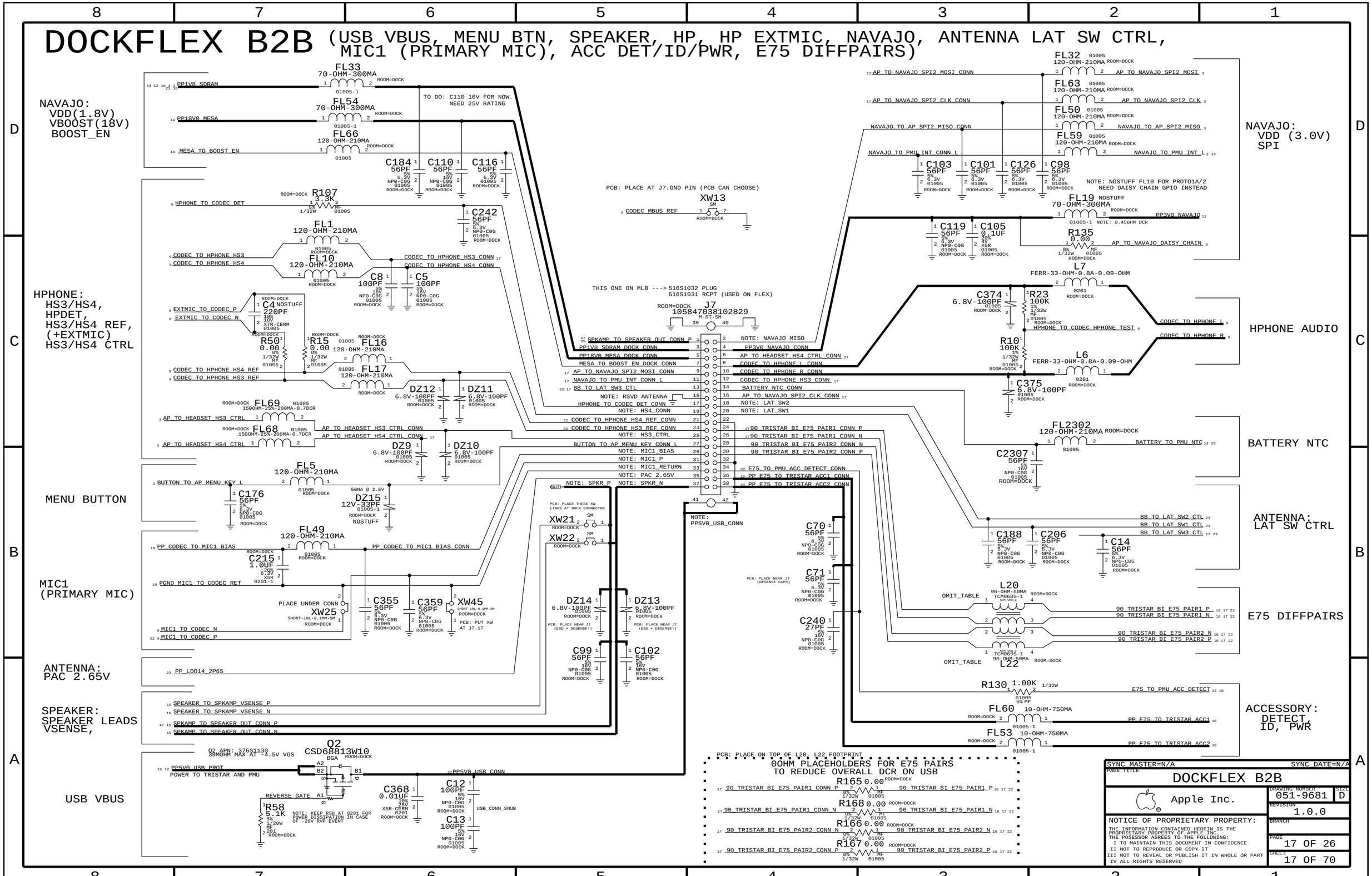

D403 (B2B,DRIVER ICS)

CUMULUS C0

343S0574

SAGE2 B06

343S0628

PP SAGE TO TOUCH VCPL
C381 0.1UF 10% 16V X5R-CERM 0201 ROOM=SAGE
C306 0.1UF 10% 16V X5R-CERM 0201 ROOM=SAGE
C315 1UF 10% 16V X6S-CERM 0402 ROOM=SAGE
C324 1UF 10% 16V X6S-CERM 0402 ROOM=SAGE
C331 1UF 10% 16V X6S-CERM 0402 ROOM=SAGE

PP SAGE TO TOUCH VCPH 13.5V
C170 0.1UF 10% 16V X5R-CERM 0201 ROOM=SAGE
C365 0.1UF 10% 16V X5R-CERM 0201 ROOM=SAGE

PP SAGE VCPL_F 3.5V
C163 0.1UF 10% 6.3V X5R 201 ROOM=SAGE

PN5V7_SAGE_AVDDN
R151 0.00 0% 1/32W MF 01005
TO DO: CHECK WITH STEVE, KEEP THIS RESISTOR? VALUE?
C149 10UF 20% 16V X5R-CERM 0402-1 ROOM=SAGE
DZ4 GDZT2R6.2B 002-0281 ROOM=SAGE
TO CLAMP THE NEGATIVE RAIL
PN5V7_SAGE_AVDDN_FILT
PP5V7_SAGE_AVDDH 5.45-5.98V
C156 10UF 20% 16V X5R-CERM 0402-1 ROOM=SAGE OMIT_TABLE

PP1V8 2 3 5 6 7 10 11 12 14 16 19 21
C165 0.1UF 20% 4V X5R 01005 ROOM=SAGE

(TURN ON LATER THAN PP1V8_GRAPE)
(TURN OFF SAME TIME AS PP1V8_GRAPE)
PP5V1_GRAPE_VDDH
C369 10UF 20% 16V X5R-CERM 0402-1 ROOM=CUMULUS
PP_CUMULUS_VDDCORE
PP_CUMULUS_VDDANA
C370 4.7UF 20% 6.3V X5R-CERM1 402 ROOM=CUMULUS
C371 4.7UF 20% 6.3V X5R-CERM1 402 ROOM=CUMULUS
PP1V8_CUMULUS_VDDLDO
C372 1.0UF 20% 6.3V X5R 0201-1 ROOM=CUMULUS
XW36 SM ROOM=CUMULUS
PP1V8_GRAPE 12 18

U12 CUMULUS-C0 WLBGA
VDDANA B1, VDDCORE C1, VDDH C8, VDDIO C5 F4, VDDLDO A1

U15 SAGE2-B06 CSP
VCPH D2, VCPL A3, VCPL_F F3, AVDDH1 F6, AVDDH2 H5, AVDDH3 A1, AVDDH4 F1, AVDDL1 E2, VCPL_F C3, VDDIO

SAGE PANEL IN IS SENSITIVE
KEEP THESE NETS FROM XTALK

CUMULUS_IN IS SENSITIVE
KEEP THESE NETS FROM XTALK

45_PROX_TO_CUMULUS_RX
C79 1000PF 10% 6.3V X5R-CERM 01005 ROOM=CUMULUS
45_PROX_TO_CUMULUS_RX_FILT
R26 22.1K 1% 1/32W MF 01005 ROOM=CUMULUS
C130 27PF 5% 16V NP0-C0G 01005 ROOM=CUMULUS

R86 220K 5% 1/32W MF 01005 ROOM=CUMULUS

SAGE_VBIAS_DRAIN
Q6 RV1C002UN SM ROOM=SAGE
SAGE_DUMP_GATE
R121 1.00M 5% 1/32W MF 01005 ROOM=SAGE
C366 0.1UF 10% 16V X5R-CERM 0201 ROOM=SAGE

THESE ARE ROUTED TOGETHER
SPECIAL - CANNOT SWAP
SPECIAL - CANNOT SWAP

PP7 P4MM SM ROOM=CUMULUS
PP8 P4MM SM ROOM=CUMULUS
AP_TO_TOUCH_SPI1_CS_L
TOUCH_TO_AP_INT_L
AP_TO_TOUCH_SPI1_CLK
AP_TO_TOUCH_SPI1_MOSI
TOUCH_TO_AP_SPI1_MISO
R136 10.2 1% 1/32W MF 01005 ROOM=CUMULUS
TOUCH_TO_AP_SPI1_MISO_R

R134 NOSTUFF 0.00 0% 1/32W MF 01005 ROOM=CUMULUS
45_PMU_TO_TOUCH_CLK32K_RESET_L
NOTE: PMU OUTPUT WIRED UP BY DEFAULT
R51 0.00 0% 1/32W MF 01005 ROOM=CUMULUS
45_AP_TO_TOUCH_CLK32K_RESET_L
(ALSO A RESET IF CLOCK STOPS)
PP12 P4MM SM ROOM=CUMULUS

PP1V8_CUMULUS_VDDLDO
CUMULUS_TO_PROX_TX_EN_1V8_L
45_TOUCH_CLK32K_RESET_L
AP_TO_TOUCH_GRAPE_RESET_L
GND C7 C9 C2

GPIO_1/CK G1 NOTE: LCM_TO_AP_HIFA_BSYNC_BUFF
GPIO_2/SD D4 CUMULUS_TO_SAGE_BOOST_EN
GPIO_3 F2 U12_GPIO_3
GPIO_4 F3 CUMULUS_TO_SAGE_GCM_SEL
PP9 P4MM SM ROOM=CUMULUS
TM_ACS* C2 CUMULUS_TO_PROX_RX_EN_1V8
TM_OVR G3
R79 100K 5% 1/32W MF 01005
PP1V8_GRAPE 12 18

XW37 SM
PP_SAGE_VCPL_F
D2 DSF01S30SC SM-201 NOSTUFF
SAGE_TO_TOUCH_VCPH_REF
SAGE_TO_TOUCH_VCPL_REF
C150 0.01UF 10% 6.3V X5R 01005 ROOM=SAGE
C147 0.01UF 10% 6.3V X5R 01005 ROOM=SAGE
C137 0.1UF 10% 6.3V X5R 201 ROOM=SAGE
PP_SAGE_VBST_OUTH
PP_SAGE_VBST_OUTL
PP_SAGE_LX
PP_SAGE_LY
C321 0.33UF 20% 20V TANT 0402 ROOM=SAGE
C328 1000PF 10% 25V X7R-CERM 0201 ROOM=SAGE
C349 1000PF 10% 25V X7R-CERM 0201 ROOM=SAGE
L21 10UH-0.32A-1.56OHM PS812101T-SM ROOM=SAGE
PP5V7_SAGE_AVDDH
C320 1UF 20% 20V TANT 0603-LLP ROOM=SAGE
C346 1000PF 10% 25V X7R-CERM 0201 ROOM=SAGE
C364 1000PF 10% 25V X7R-CERM 0201 ROOM=SAGE

PP11 P4MM SM ROOM=SAGE
PP18 P4MM SM ROOM=SAGE

TOUCH B2B

J4 ROOM=TOUCH_B2B 504459-4210 M-ST-SM
ON MLB ---> 516S1061 PLUG
516S1060 RCPT (ON FLEX)

R47 0.00 0% 1/32W MF 01005 ROOM=TOUCH_B2B
SAGE_TO_TOUCH_VCPH_REF_CONN — SAGE_TO_TOUCH_VCPH_REF
R48 0.00 0% 1/32W MF 01005 ROOM=TOUCH_B2B
SAGE_TO_TOUCH_VCPL_REF_CONN — SAGE_TO_TOUCH_VCPL_REF
R49 0.00 0% 1/32W MF 01005 ROOM=TOUCH_B2B
TOUCH_TO_SAGE_VCM_IN_CONN — TOUCH_TO_SAGE_VCM_IN
R61 0.00 0% 1/32W MF 01005 ROOM=TOUCH_B2B
PP_SAGE_TO_TOUCH_VCPL_CONN — PP_SAGE_TO_TOUCH_VCPL
R62 0.00 0% 1/32W MF 01005 ROOM=TOUCH_B2B
PP_SAGE_TO_TOUCH_VCPH_CONN — PP_SAGE_TO_TOUCH_VCPH

R36 100K 5% 1/32W MF 01005
LCM_TO_AP_HIFA_BSYNC_BUFF
CUMULUS_TO_PROX_TX_EN_BUFF
U5 74AUP2G3404GN SOT1115 VCC GND
PP1V8_GRAPE 12 18
R2 100K 5% 1/32W MF 01005
LCM_TO_AP_HIFA_BSYNC 3 14 18 19
CUMULUS_TO_PROX_TX_EN_1V8_L

SYNC MASTER=N/A	SYNC DATE=N/A
PAGE TITLE: D403 (TOUCH B2B, DRIVER ICS)	
Apple Inc.	DRAWING NUMBER: 051-9681 SIZE: D
	REVISION: 1.0.0
NOTICE OF PROPRIETARY PROPERTY: THE INFORMATION CONTAINED HEREIN IS THE PROPRIETARY PROPERTY OF APPLE INC. THE POSESSOR AGREES TO THE FOLLOWING: I TO MAINTAIN THIS DOCUMENT IN CONFIDENCE II NOT TO REPRODUCE OR COPY IT III NOT TO REVEAL OR PUBLISH IT IN WHOLE OR PART IV ALL RIGHTS RESERVED	BRANCH
	PAGE: 18 OF 26
	SHEET: 18 OF 70

LCM B2B

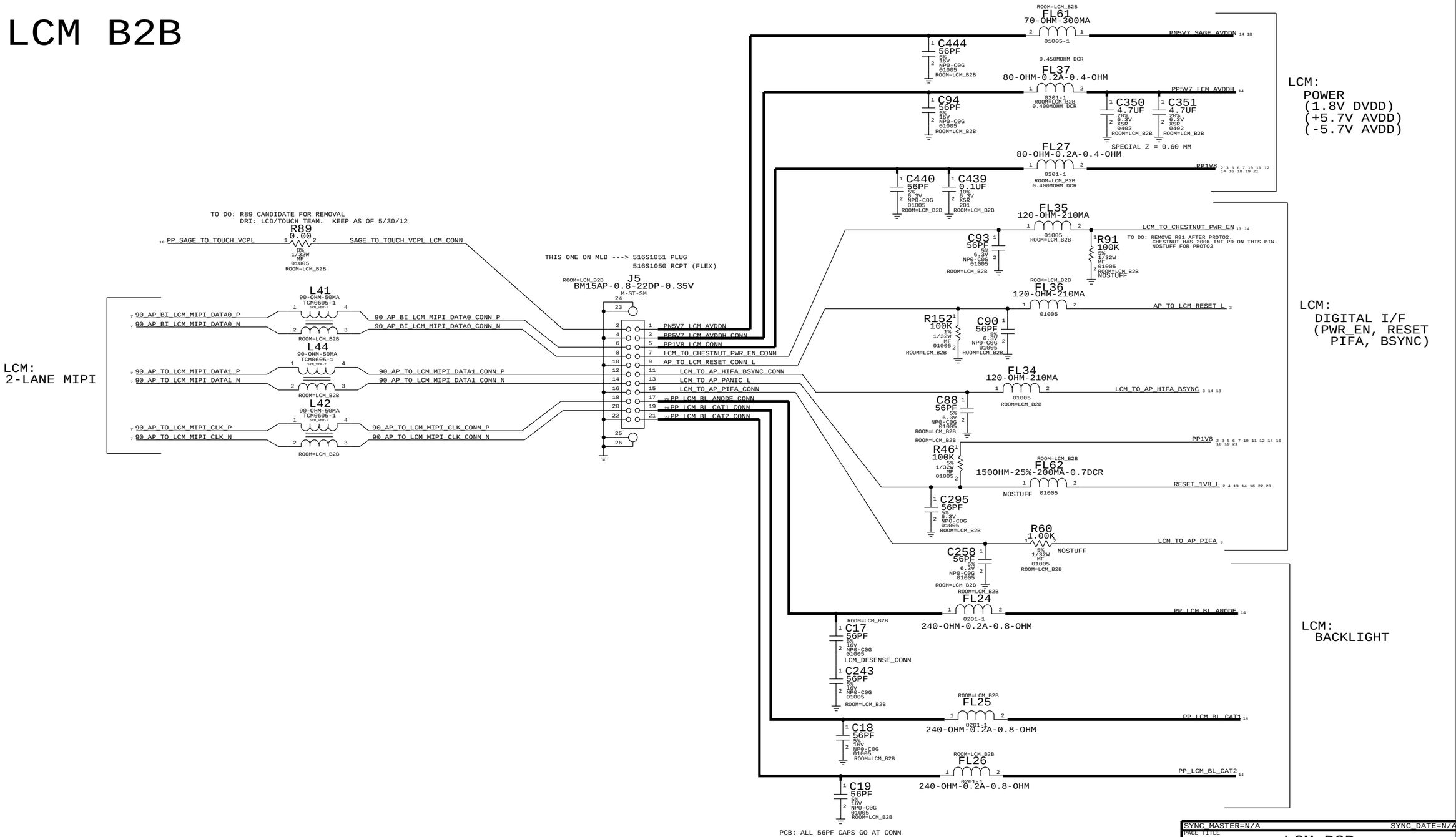

SYNC_MASTER=N/A SYNC_DATE=N/A

PAGE TITLE: LCM B2B

Apple Inc.

DRAWING NUMBER: 051-9681 SIZE: D

REVISION: 1.0.0

BRANCH:

PAGE: 19 OF 26

SHEET: 19 OF 70

NOTICE OF PROPRIETARY PROPERTY:
THE INFORMATION CONTAINED HEREIN IS THE PROPRIETARY PROPERTY OF APPLE INC.
THE POSESSOR AGREES TO THE FOLLOWING:
I TO MAINTAIN THIS DOCUMENT IN CONFIDENCE
II NOT TO REPRODUCE OR COPY IT
III NOT TO REVEAL OR PUBLISH IT IN WHOLE OR PART
IV ALL RIGHTS RESERVED

OSCAR + SENSORS

OSCAR MODULE W/ CRENELATED CORNERS

APN 998-5272

OSCAR VDDIO = 1.8V ALWAYS ON (NEED TO WAKE HOST & RUN PLL)
OSCAR CORE = 1.2V ALWAYS ON (NEED TO RUN IN S2RAM)

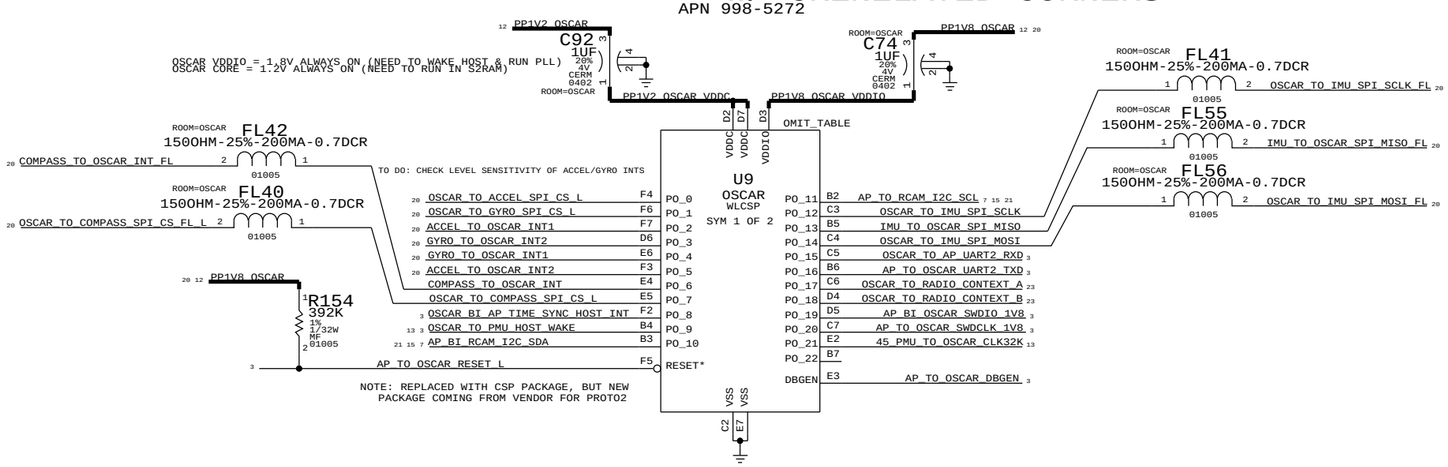

NOTE: REPLACED WITH CSP PACKAGE, BUT NEW PACKAGE COMING FROM VENDOR FOR PROTO2

OSCAR MODULE GND BALLS

(THIS SYMBOL DOES NOT EXIST ON OSCAR CSP)

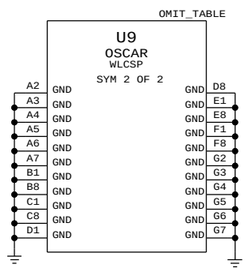

THESE PARTS INSIDE OF SHIELD

GYRO

X152: INVENSENSE ITG-3600, APN 338S1135

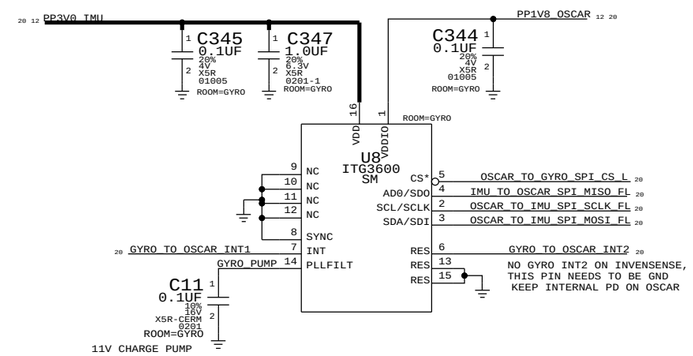

ACCELEROMETER

X152: BOSCH BMA282, APN 338S1163

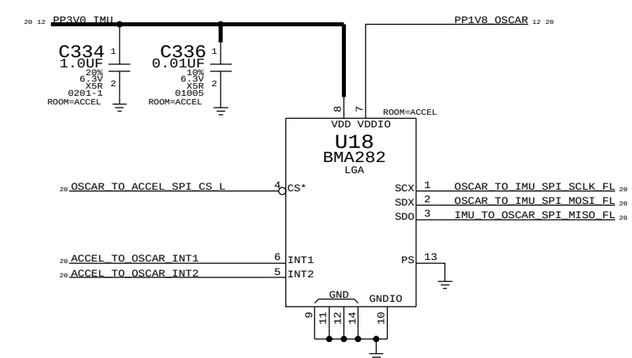

THIS PART OUTSIDE OF SHIELD

COMPASS

COMPASS CSP: 338S1014
COMPASS INTERPOSER (FOOTPRINT ONLY): 998-5120
COMPASS INTERPOSER MODULE: 639-4024

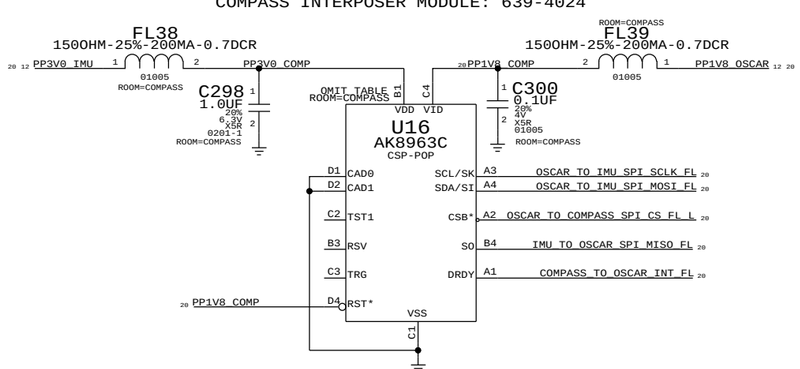

SYNC_MASTER=N/A	SYNC_DATE=N/A
PAGE TITLE: OSCAR + SENSORS	
Apple Inc.	DRAWING NUMBER: 051-9681 SIZE: D
	REVISION: 1.0.0
	BRANCH
	PAGE: 20 OF 26
	SHEET: 20 OF 70

NOTICE OF PROPRIETARY PROPERTY:
THE INFORMATION CONTAINED HEREIN IS THE PROPRIETARY PROPERTY OF APPLE INC.
THE POSESSOR AGREES TO THE FOLLOWING:
I TO MAINTAIN THIS DOCUMENT IN CONFIDENCE
II NOT TO REPRODUCE OR COPY IT
III NOT TO REVEAL OR PUBLISH IT IN WHOLE OR PART
IV ALL RIGHTS RESERVED

RCAM B2B (REAR CAMERA CONNECTOR)

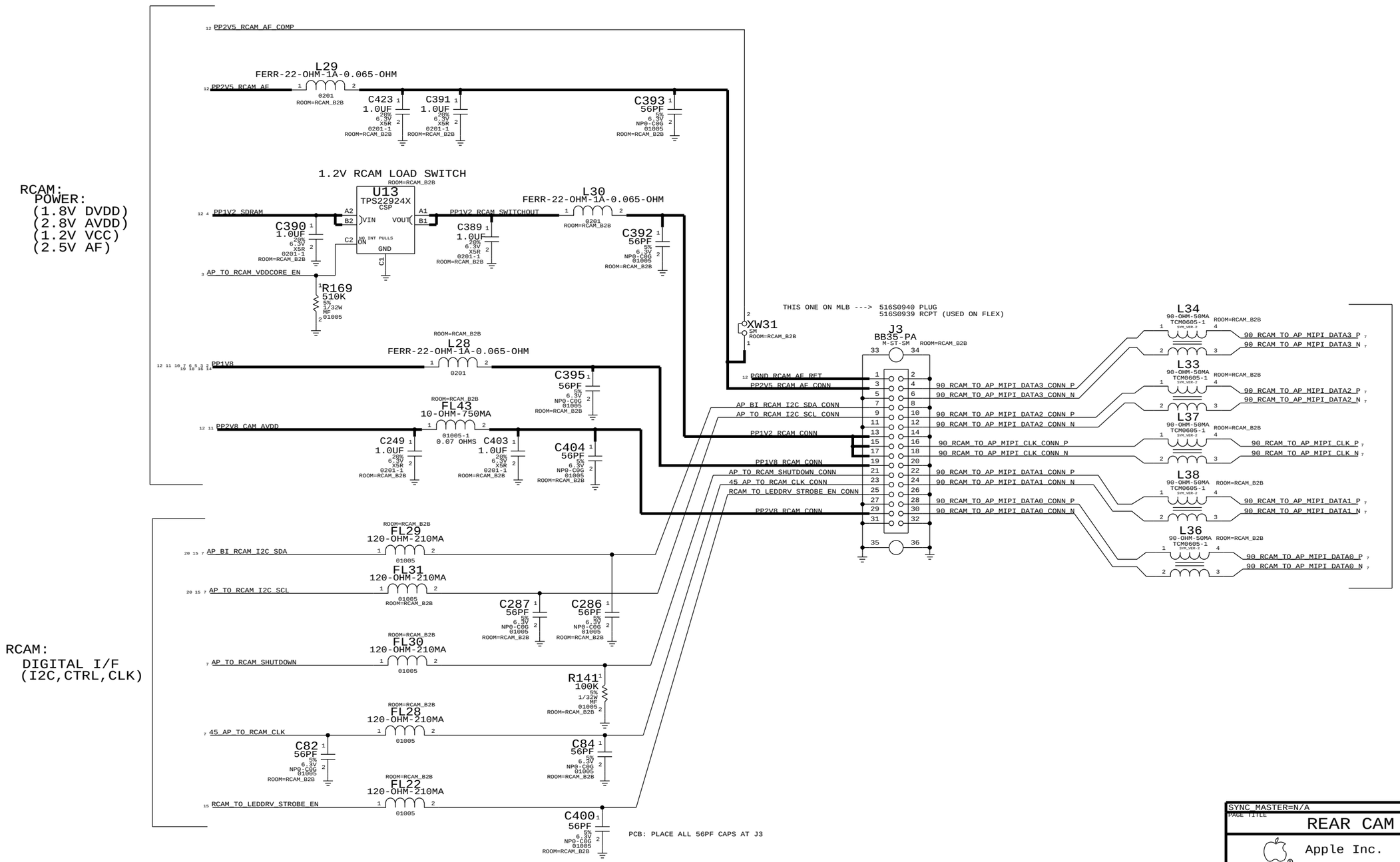

SYNC_MASTER=N/A SYNC_DATE=N/A

PAGE TITLE: REAR CAM B2B

Apple Inc.

DRAWING NUMBER: 051-9681 SIZE: D

REVISION: 1.0.0

BRANCH:

PAGE: 21 OF 26

SHEET: 21 OF 70

NOTICE OF PROPRIETARY PROPERTY:
THE INFORMATION CONTAINED HEREIN IS THE PROPRIETARY PROPERTY OF APPLE INC.
THE POSESSOR AGREES TO THE FOLLOWING:
I TO MAINTAIN THIS DOCUMENT IN CONFIDENCE
II NOT TO REPRODUCE OR COPY IT
III NOT TO REVEAL OR PUBLISH IT IN WHOLE OR PART
IV ALL RIGHTS RESERVED

BATT CONN, TPS, STANDOFFS/SHIELDS/FIDUCIALS

BATTERY CONN

THIS ONE ON MLB ---> 516S1022 RCPT
516S1023 PLUG (USED ON BATTERY PCM)

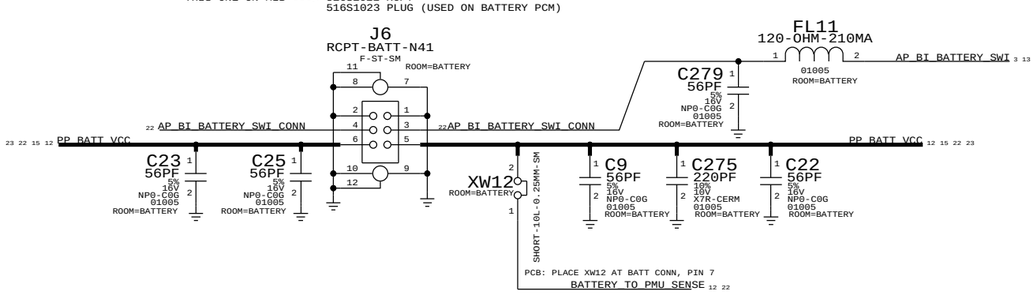

FIDUCIALS

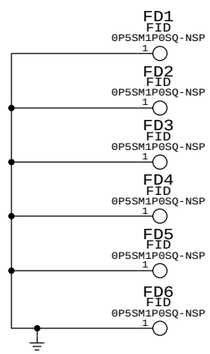

SHIELDS

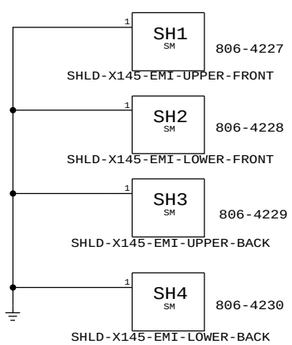

COWLING

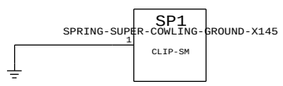

AC COUPLED SCREW HOLES + STANDOFFS

(ON NORTH END OF SINGLE_BRD, TO MITIGATE COMPASS RETURN CURRENTS)

SCREW HOLES

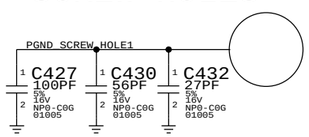

STANDOFFS

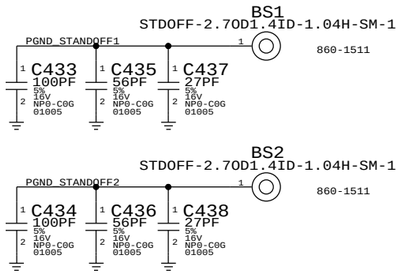

TESTPOINTS

POWER TP

PP5V0_USB_CONN	TP1	VBUS
	TP2	POWER GROUND (SUPERSIZE)
PP_BATT_VCC	TP12	VBAT (SUPERSIZE)
BATTERY_TO_PMU_SENSE	TP4	BATTERY SNS
BATTERY_TO_PMU_NTC	TP5	BATTERY NTC

SUPER TP

PMU_TO_TP_AMUX_AY	TP6	ANALOG MUX A OUTPUT
PMU_TO_TP_AMUX_BY	TP7	ANALOG MUX B OUTPUT

RESET

RESET_1V8_L	TP8	H6P & BB RESET

DFU

FORCE_DFU	TP9	FORCE DFU

HEADPHONE MIC

CODEC_TO_HPHONE_HS3_REF_CONN	TP28	HEADPHONE MIC NEG
CODEC_TO_HPHONE_HS4_REF_CONN	TP29	HEADPHONE MIC POS

LCM BACKLIGHT

PP_LCM_BL_CAT1_CONN	TP18	LCD BACKLIGHT SINK1
PP_LCM_BL_CAT2_CONN	TP19	LCD BACKLIGHT SINK2
PP_LCM_BL_ANODE_CONN	TP20	LCD BACKLIGHT SOURCE

E75 - USB/UART/ID/POWER

90_TRISTAR_BI_E75_PAIR1_P	TP21	
90_TRISTAR_BI_E75_PAIR1_N	TP22	
90_TRISTAR_BI_E75_PAIR2_P	TP23	
90_TRISTAR_BI_E75_PAIR2_N	TP24	
PP_E75_TO_TRISTAR_ACC1_CONN	TP26	ACCESSORY ID AND POWER
PP_E75_TO_TRISTAR_ACC2_CONN	TP27	
	TP32	POWER GROUND
E75_TO_PMU_ACC_DETECT_CONN	TP10	FOR DIAGS

MIC AUDIO

MIC1_TO_CODEC_P	TP15	MIC1 POSITIVE
MIC2_TO_CODEC_P	TP16	MIC2 POSITIVE
MIC3_TO_CODEC_P	TP17	MIC3 POSITIVE

DRIVE MIC WRT NEAREST GROUND TEST POINT

SYNC MASTER=N/A SYNC DATE=N/A

PAGE TITLE
BATT B2B, TPS, PD FEATURES

Apple Inc.

DRAWING NUMBER 051-9681 SIZE D
REVISION 1.0.0
BRANCH
PAGE 22 OF 26
SHEET 22 OF 70

NOTICE OF PROPRIETARY PROPERTY:
THE INFORMATION CONTAINED HEREIN IS THE PROPRIETARY PROPERTY OF APPLE INC.
THE POSESSOR AGREES TO THE FOLLOWING:
I TO MAINTAIN THIS DOCUMENT IN CONFIDENCE
II NOT TO REPRODUCE OR COPY IT
III NOT TO REVEAL OR PUBLISH IT IN WHOLE OR PART
IV ALL RIGHTS RESERVED

RADIO_MLB HIERARCHICAL SYMBOL

AP/RADIO INTERFACE

RF
I624

44 22 15 12	IN	PP_BATT_VCC	MAKE_BASE=TRUE	PP_BATT_VCC_CONN			
65 14 13 12 10	IN	PP_VCC_MAIN	MAKE_BASE=TRUE	PP_VCC_MAIN_WLAN			
65 17 16 14 12 10 4 3	IN	PP1V8_SDRAM	MAKE_BASE=TRUE	PP_WL_BT_VDDIO_AP			
45 17	OUT	PP_LDO14_2P65	MAKE_BASE=TRUE	PP_LDO14_2V65			
44 3	IN	AP_TO_RADIO_ON_L	MAKE_BASE=TRUE	RADIO_ON_L	BB_JTAG_TCK	MAKE_BASE=TRUE	AP_TO_BB_JTAG_TCK BI 3 44
44 3	OUT	BB_TO_AP_RESET_DET_L	MAKE_BASE=TRUE	RESET_DET_L	BB_JTAG_TDI	MAKE_BASE=TRUE	AP_TO_BB_JTAG_TDI BI 3 44
44 13	IN	PMU_TO_BB_RST_L	MAKE_BASE=TRUE	RESET_PMU_L	BB_JTAG_TMS	MAKE_BASE=TRUE	AP_TO_BB_JTAG_TMS BI 3 44
44 3	IN	AP_TO_BB_RST_L	MAKE_BASE=TRUE	BB_RST_L	BB_JTAG_TRST_L	MAKE_BASE=TRUE	AP_TO_BB_JTAG_TRST_L BI 3 44
44 22 19 16 14 13 4 2	OUT	RESET_1V8_L	MAKE_BASE=TRUE	RF_RESET_L	BB_JTAG_TDO	MAKE_BASE=TRUE	BB_TO_AP_JTAG_TDO BI 3 44
44 13	IN	45_PMU_TO_WLAN_CLK32K	MAKE_BASE=TRUE	CLK32K_AP			
48 15	OUT	BB_TO_LEDDRV_GSM_BLANK	MAKE_BASE=TRUE	TX_GTR_THRESH			
44 16	BI	90_TRISTAR_BI_BB_USB_N	MAKE_BASE=TRUE	90_BB_USB_D_N			
44 16	BI	90_TRISTAR_BI_BB_USB_P	MAKE_BASE=TRUE	90_BB_USB_D_P			
44 13	IN	PMU_TO_BB_VBUS_DET	MAKE_BASE=TRUE	BB_USB_VBUS			
44 3	IN	AP_TO_BB_UART4_RTS_L	MAKE_BASE=TRUE	BB_UART_CTS_L			
44 3	OUT	BB_TO_AP_UART4_CTS_L	MAKE_BASE=TRUE	BB_UART_RTS_L			
44 16 3	IN	AP_TO_BB_UART4_TXD	MAKE_BASE=TRUE	BB_UART_RXD			
44 16 3	OUT	BB_TO_AP_UART4_RXD	MAKE_BASE=TRUE	BB_UART_TXD			
44 13	OUT	BB_TO_PMU_HOST_WAKE	MAKE_BASE=TRUE	HOST_WAKE_BB			
48 3	OUT	BB_TO_AP_PP_SYNC	MAKE_BASE=TRUE	PP_SYNC			
44 3	IN	45_AP_TO_BB_I2S1_BCLK	MAKE_BASE=TRUE	BB_I2S_CLK RADIO_MLB			
44 3	IN	AP_TO_BB_I2S1_DOUT	MAKE_BASE=TRUE	BB_I2S_RXD			
44 3	OUT	BB_TO_AP_I2S1_DIN	MAKE_BASE=TRUE	BB_I2S_TXD			
44 3	IN	AP_TO_BB_I2S1_LRCLK	MAKE_BASE=TRUE	BB_I2S_WS			
44 13	OUT	RADIO_TO_PMU_ADC_SMPS1_MSMC_1V05	MAKE_BASE=TRUE	ADC_SMPS1_MSMC_1V05			
44 13	OUT	RADIO_TO_PMU_ADC_SMPS3_MSME_1V8	MAKE_BASE=TRUE	ADC_SMPS3_MSME_1V8			
44 13	OUT	RADIO_TO_PMU_ADC_LDO6_RUIM_1V8	MAKE_BASE=TRUE	ADC_LDO6_RUIM_1V8			
44 13	OUT	RADIO_TO_PMU_ADC_LVS1	MAKE_BASE=TRUE	ADC_LVS1			
44 13	IN	PMU_TO_WLAN_REG_ON	MAKE_BASE=TRUE	WLAN_REG_ON			
65 3	IN	AP_TO_WLAN_UART3_TXD	MAKE_BASE=TRUE	WLAN_UART_RXD			
65 3	OUT	WLAN_TO_AP_UART3_RXD	MAKE_BASE=TRUE	WLAN_UART_TXD			
65 13	OUT	WLAN_TO_PMU_HOST_WAKE	MAKE_BASE=TRUE	HOST_WAKE_WLAN			
44 13	IN	PMU_TO_BT_REG_ON	MAKE_BASE=TRUE	BT_REG_ON			
65 3	IN	AP_TO_BT_UART1_RTS_L	MAKE_BASE=TRUE	BT_UART_CTS_L			
65 3	OUT	BT_TO_AP_UART1_CTS_L	MAKE_BASE=TRUE	BT_UART_RTS_L			
44 3	IN	AP_TO_BT_UART1_TXD	MAKE_BASE=TRUE	BT_UART_RXD			
44 3	OUT	BT_TO_AP_UART1_RXD	MAKE_BASE=TRUE	BT_UART_TXD			
44 3	IN	AP_TO_BT_WAKE	MAKE_BASE=TRUE	BT_WAKE			
65 13	OUT	BT_TO_PMU_HOST_WAKE	MAKE_BASE=TRUE	HOST_WAKE_BT			
65 3	BI	45_AP_TO_BT_I2S3_BCLK	MAKE_BASE=TRUE	BT_PCM_CLK			
65 3	BI	AP_TO_BT_I2S3_DOUT	MAKE_BASE=TRUE	BT_PCM_IN			
65 3	BI	BT_TO_AP_I2S3_DIN	MAKE_BASE=TRUE	BT_PCM_OUT			
65 3	BI	AP_TO_BT_I2S3_LRCLK	MAKE_BASE=TRUE	BT_PCM_SYNC			
44 2	BI	50_AP_BI_BB_HSIC1_DATA	MAKE_BASE=TRUE	50_HSIC_BB_DATA			
44 2	BI	50_AP_BI_BB_HSIC1_STB	MAKE_BASE=TRUE	50_HSIC_BB_STROBE			
44 3	IN	AP_TO_BB_HSIC1_RDY	MAKE_BASE=TRUE	AP_HSIC1_RDY			
44 3	OUT	BB_TO_AP_HSIC1_RDY	MAKE_BASE=TRUE	PBL_RUN_BB_HSIC1_RDY			
48 3	BI	BB_TO_AP_HSIC1_REMOTE_WAKE	MAKE_BASE=TRUE	BB_HSIC1_REMOTE_WAKE			
48 3	IN	AP_TO_BB_WAKE_MODEM	MAKE_BASE=TRUE	AP_WAKE_MODEM			
44 2	BI	50_AP_BI_WLAN_HSIC2_DATA	MAKE_BASE=TRUE	50_HSIC_WLAN_DATA			
44 2	BI	50_AP_BI_WLAN_HSIC2_STB	MAKE_BASE=TRUE	50_HSIC_WLAN_STROBE			
44 3	OUT	AP_TO_WLAN_HSIC2_RDY	MAKE_BASE=TRUE	AP_HSIC3_RDY			
44 3	OUT	WLAN_TO_AP_HSIC2_RDY	MAKE_BASE=TRUE	WLAN_HSIC3_DEVICE_RDY			
44 3	BI	WLAN_TO_AP_HSIC2_REMOTE_WAKE	MAKE_BASE=TRUE	WLAN_HSIC3_RESUME			
44 17	OUT	BB_TO_LAT_SW1_CTL	MAKE_BASE=TRUE	LAT_SW1_CTL			
48 17	OUT	BB_TO_LAT_SW2_CTL	MAKE_BASE=TRUE	LAT_SW2_CTL			
48 17	OUT	BB_TO_LAT_SW3_CTL	MAKE_BASE=TRUE	LAT_SW3_CTL			
48 8	OUT	BB_TO_ANTENNA_PAC_SPI_CS	MAKE_BASE=TRUE	BB_SPI_TO_PAC_CS			
48 8	OUT	BB_TO_ANTENNA_PAC_SPI_SCLK	MAKE_BASE=TRUE	BB_SPI_TO_PAC_CLK			
48 8	OUT	BB_TO_ANTENNA_PAC_SPI_MOSI	MAKE_BASE=TRUE	BB_SPI_TO_PAC_DATA_MOSI			
48	IN	ANTENNA_PAC_TO_BB_SPI_MISO	MAKE_BASE=TRUE	PAC_TO_BB_SPI_DATA_MISO			
48 7	BI	BB_TO_AP_IPC_GPIO	MAKE_BASE=TRUE	BB_IPC_GPIO			
48 20	IN	OSCAR_TO_RADIO_CONTEXT_A	MAKE_BASE=TRUE	OSCAR_CONTEXT_A			
48 20	IN	OSCAR_TO_RADIO_CONTEXT_B	MAKE_BASE=TRUE	OSCAR_CONTEXT_B			
48 3	OUT	BB_TO_AP_SOCHOT0	MAKE_BASE=TRUE	TX_GTR_THRESH_OD			
				BB_I2S2_CLK			
				BB_I2S2_WS			
				BB_I2S2_RXD			
				BB_I2S_MCLK			

SYNC_MASTER=N/A SYNC_DATE=N/A

PAGE TITLE
RADIO_MLB HIERARCH. SYMBOL

Apple Inc.

DRAWING NUMBER 051-9681 SIZE D

REVISION 1.0.0

BRANCH

PAGE 23 OF 26

SHEET 23 OF 70

NOTICE OF PROPRIETARY PROPERTY:
THE INFORMATION CONTAINED HEREIN IS THE PROPRIETARY PROPERTY OF APPLE INC.
THE POSESSOR AGREES TO THE FOLLOWING:
I TO MAINTAIN THIS DOCUMENT IN CONFIDENCE
II NOT TO REPRODUCE OR COPY IT
III NOT TO REVEAL OR PUBLISH IT IN WHOLE OR PART
IV ALL RIGHTS RESERVED

I1

CREFRPT

65

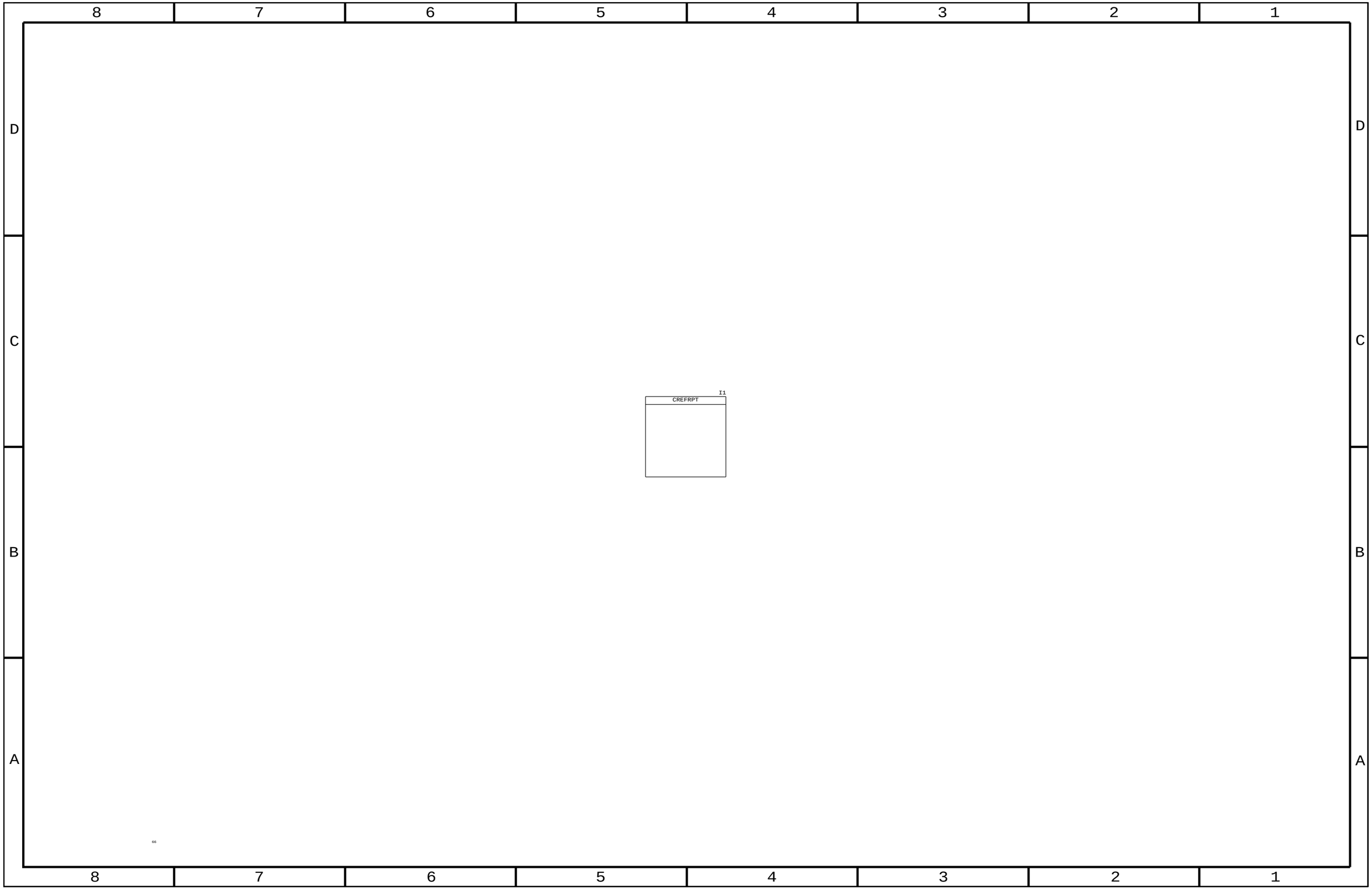
CREFRPT
I1

8 7 6 5 4 3 2 1

Title: Basenet Report
Design: single_brd
Date: Sep 7 13:12:06 2012

Base nets and synonyms for
single_brd_lib.SINGLE_BRD(@single_brd_lib.single_brd(sch_1))
Base Signal Synonyms Location([Zone][dir])

45_AMBER_VSS_RTC 45_AMBER_VSS_RTC - 12A7
@single_brd_lib.SINGLE_BRD
45_AP_BI_NAND_ANC0_D 45_AP_BI_NAND_ANC0_DQS - 6A7 6B8 6C2
QS @single_brd_lib.SINGLE_BRD
45_AP_BI_NAND_ANC1_D 45_AP_BI_NAND_ANC1_DQS - 6B3 6B6
QS @single_brd_lib.SINGLE_BRD
45_AP_PPN0_ZQ 45_AP_PPN0_ZQ - 6B8
@single_brd_lib.SINGLE_BRD
45_AP_PPN1_ZQ 45_AP_PPN1_ZQ - 6B6
@single_brd_lib.SINGLE_BRD
45_AP_TO_BB_I2S1_BCL 45_AP_TO_BB_I2S1_BCLK - 3C4 23C6
K @single_brd_lib.SINGLE_BRD
BB_I2S_CLK - 44B6 44C8 48B4
@single_brd_lib.RADIO_MLB(i624_page
23)
45_AP_TO_BT_I2S3_BCL 45_AP_TO_BT_I2S3_BCLK - 3C4 23B6
K @single_brd_lib.SINGLE_BRD
BT_PCM_CLK - 44B8 65B3
@single_brd_lib.RADIO_MLB(i624_page
23)
45_AP_TO_CODEC_ASP_I 45_AP_TO_CODEC_ASP_I2S0_BCLK - 3D4 10D3
2S0_BCLK @single_brd_lib.SINGLE_BRD
45_AP_TO_CODEC_I2S_M 45_AP_TO_CODEC_I2S_MCLK - 3D5 10D3
CLK @single_brd_lib.SINGLE_BRD
45_AP_TO_CODEC_I2S_M 45_AP_TO_CODEC_I2S_MCLK_R - 3D4
CLK_R @single_brd_lib.SINGLE_BRD
45_AP_TO_CODEC_VSP_I 45_AP_TO_CODEC_VSP_I2S4_BCLK - 3C4 10C3
2S4_BCLK @single_brd_lib.SINGLE_BRD
45_AP_TO_CODEC_XSP_I 45_AP_TO_CODEC_XSP_I2S2_BCLK - 3C4 10C3 15C6
2S2_BCLK @single_brd_lib.SINGLE_BRD
45_AP_TO_FCAM_CLK 45_AP_TO_FCAM_CLK - 7B4 11D8
@single_brd_lib.SINGLE_BRD
45_AP_TO_FCAM_CLK_CO 45_AP_TO_FCAM_CLK_CONN - 11D6
NN @single_brd_lib.SINGLE_BRD
45_AP_TO_FCAM_CLK_R 45_AP_TO_FCAM_CLK_R - 7C6
@single_brd_lib.SINGLE_BRD
45_AP_TO_NAND_ANC0_R 45_AP_TO_NAND_ANC0_RE_L - 6A7 6B8 6C2
E_L @single_brd_lib.SINGLE_BRD
45_AP_TO_NAND_ANC1_R 45_AP_TO_NAND_ANC1_RE_L - 6B3 6B6
E_L @single_brd_lib.SINGLE_BRD
45_AP_TO_PMU_DWI_CLK 45_AP_TO_PMU_DWI_CLK - 3C2 13B7 14B6
@single_brd_lib.SINGLE_BRD
45_AP_TO_PMU_DWI_CLK 45_AP_TO_PMU_DWI_CLK_XW - 13B6
_XW @single_brd_lib.SINGLE_BRD
45_AP_TO_PMU_DWI_DO 45_AP_TO_PMU_DWI_DO - 3C2 13B7 14B6
@single_brd_lib.SINGLE_BRD
45_AP_TO_PMU_DWI_DO_ 45_AP_TO_PMU_DWI_DO_XW - 13B6
XW @single_brd_lib.SINGLE_BRD
45_AP_TO_RCAM_CLK 45_AP_TO_RCAM_CLK - 7C4 21A7
@single_brd_lib.SINGLE_BRD
45_AP_TO_RCAM_CLK_CO 45_AP_TO_RCAM_CLK_CONN - 21B4
NN @single_brd_lib.SINGLE_BRD
45_AP_TO_RCAM_CLK_R 45_AP_TO_RCAM_CLK_R - 7C6
@single_brd_lib.SINGLE_BRD
45_AP_TO_SPKAMP_I2S2 45_AP_TO_SPKAMP_I2S2_MCLK - 3C5 15C6
_MCLK @single_brd_lib.SINGLE_BRD
45_AP_TO_SPKAMP_I2S2 45_AP_TO_SPKAMP_I2S2_MCLK_R - 3C4
_MCLK_R @single_brd_lib.SINGLE_BRD
45_AP_TO_TOUCH_CLK32 45_AP_TO_TOUCH_CLK32K_RESET_L - 3C5 18B8
K_RESET_L @single_brd_lib.SINGLE_BRD
45_BUCK0_FB 45_BUCK0_FB - 4A3 12D4
@single_brd_lib.SINGLE_BRD
45_BUCK1_FB 45_BUCK1_FB - 4A1 12C4
@single_brd_lib.SINGLE_BRD
45_BUCK2_FB 45_BUCK2_FB - 4A5 12C4
@single_brd_lib.SINGLE_BRD
45_BUCK3_FB 45_BUCK3_FB - 12B5
@single_brd_lib.SINGLE_BRD
45_BUCK4_FB 45_BUCK4_FB - 12B5
@single_brd_lib.SINGLE_BRD
45_BUCK5_FB 45_BUCK5_FB - 12B5
@single_brd_lib.SINGLE_BRD
45_CAM_AVDD_FB 45_CAM_AVDD_FB - 11C2 12A2
@single_brd_lib.SINGLE_BRD
45_DDR0_VREF_CA 45_DDR0_VREF_CA - 4A7 4D8
@single_brd_lib.SINGLE_BRD
45_DDR0_VREF_DQ 45_DDR0_VREF_DQ - 4A5 4D8
@single_brd_lib.SINGLE_BRD
45_DDR0_ZQ 45_DDR0_ZQ - 4D8
@single_brd_lib.SINGLE_BRD
45_DDR1_VREF_CA 45_DDR1_VREF_CA - 4A6 4D8
@single_brd_lib.SINGLE_BRD
45_DDR1_VREF_DQ 45_DDR1_VREF_DQ - 4A4 4D8
@single_brd_lib.SINGLE_BRD
45_DDR1_ZQ 45_DDR1_ZQ - 4D8
@single_brd_lib.SINGLE_BRD
45_NAND_PPN_ZQ 45_NAND_PPN_ZQ - 6B3
@single_brd_lib.SINGLE_BRD
45_PMU_IREF 45_PMU_IREF - 13C4
@single_brd_lib.SINGLE_BRD
45_PMU_TCAL 45_PMU_TCAL - 13B6
@single_brd_lib.SINGLE_BRD
45_PMU_TO_OSCAR_CLK3 45_PMU_TO_OSCAR_CLK32K - 13B4 20C5
2K @single_brd_lib.SINGLE_BRD
45_PMU_TO_TOUCH_CLK3 45_PMU_TO_TOUCH_CLK32K_RESET_L - 13B4 18B8
2K_RESET_L @single_brd_lib.SINGLE_BRD
45_PMU_TO_WLAN_CLK32 45_PMU_TO_WLAN_CLK32K - 13B4 13C6 23D6
K @single_brd_lib.SINGLE_BRD
CLK32K_AP - 44C8 44D6 65C7
@single_brd_lib.RADIO_MLB(i624_page
23)
45_PMU_TO_XTAL_OSC32 45_PMU_TO_XTAL_OSC32 - 12A7
@single_brd_lib.SINGLE_BRD
45_PMU_VPUMP 45_PMU_VPUMP - 12A5
@single_brd_lib.SINGLE_BRD
45_PROX_TO_CUMULUS_R 45_PROX_TO_CUMULUS_RX - 11C8 18C8
X @single_brd_lib.SINGLE_BRD
45_PROX_TO_CUMULUS_R 45_PROX_TO_CUMULUS_RX_CONN - 11C6
X_CONN @single_brd_lib.SINGLE_BRD
45_PROX_TO_CUMULUS_R 45_PROX_TO_CUMULUS_RX_FILT - 18C8
X_FILT @single_brd_lib.SINGLE_BRD
45_PROX_TO_CUMULUS_R 45_PROX_TO_CUMULUS_RX_IN - 18B7
X_IN @single_brd_lib.SINGLE_BRD
45_TOUCH_CLK32K_RESE 45_TOUCH_CLK32K_RESET_L - 18B7
T_L @single_brd_lib.SINGLE_BRD
45_XTAL_24M_GND 45_XTAL_24M_GND - 2C2

@single_brd_lib.SINGLE_BRD
45_XTAL_24M_I 45_XTAL_24M_I - 2C4
@single_brd_lib.SINGLE_BRD
45_XTAL_24M_O 45_XTAL_24M_O - 2C4
@single_brd_lib.SINGLE_BRD
45_XTAL_24M_O_R 45_XTAL_24M_O_R - 2C2
@single_brd_lib.SINGLE_BRD
45_XTAL_TO_PMU_OSC32 45_XTAL_TO_PMU_OSC32 - 12A7
@single_brd_lib.SINGLE_BRD
50_AP_BI_BB_HSIC1_DA 50_AP_BI_BB_HSIC1_DATA - 2B6 23B6
TA @single_brd_lib.SINGLE_BRD
50_HSIC_BB_DATA - 44B1 44B6 44C8 47B3
@single_brd_lib.RADIO_MLB(i624_page
23)
50_AP_BI_BB_HSIC1_ST 50_AP_BI_BB_HSIC1_STB - 2B6 23B6
B @single_brd_lib.SINGLE_BRD
50_HSIC_BB_STROBE - 44B1 44B6 44C8 47B3
@single_brd_lib.RADIO_MLB(i624_page
23)
50_AP_BI_WLAN_HSIC2_ 50_AP_BI_WLAN_HSIC2_DATA - 2B6 23B6
DATA @single_brd_lib.SINGLE_BRD
50_HSIC_WLAN_DATA - 44B6 44C8 65B6
@single_brd_lib.RADIO_MLB(i624_page
23)
50_AP_BI_WLAN_HSIC2_ 50_AP_BI_WLAN_HSIC2_STB - 2B6 23B6
STB @single_brd_lib.SINGLE_BRD
50_HSIC_WLAN_STROBE - 44B6 44C8 65B6
@single_brd_lib.RADIO_MLB(i624_page
23)
90_AP_BI_LCM_MIPI_DA 90_AP_BI_LCM_MIPI_DATA0_CONN_N - 19C6
TA0_CONN_N @single_brd_lib.SINGLE_BRD
90_AP_BI_LCM_MIPI_DA 90_AP_BI_LCM_MIPI_DATA0_CONN_P - 19C6
TA0_CONN_P @single_brd_lib.SINGLE_BRD
90_AP_BI_LCM_MIPI_DA 90_AP_BI_LCM_MIPI_DATA0_N - 7B8 19C7
TA0_N @single_brd_lib.SINGLE_BRD
90_AP_BI_LCM_MIPI_DA 90_AP_BI_LCM_MIPI_DATA0_P - 7B8 19C7
TA0_P @single_brd_lib.SINGLE_BRD
90_AP_BI_TRISTAR_USB 90_AP_BI_TRISTAR_USB0_H6P_N - 2B4
0_H6P_N @single_brd_lib.SINGLE_BRD
90_AP_BI_TRISTAR_USB 90_AP_BI_TRISTAR_USB0_H6P_P - 2B4
0_H6P_P @single_brd_lib.SINGLE_BRD
90_AP_BI_TRISTAR_USB 90_AP_BI_TRISTAR_USB0_N - 2B2 16C4
0_N @single_brd_lib.SINGLE_BRD
90_AP_BI_TRISTAR_USB 90_AP_BI_TRISTAR_USB0_P - 2B2 16C4
0_P @single_brd_lib.SINGLE_BRD
90_AP_TO_LCM_MIPI_CL 90_AP_TO_LCM_MIPI_CLK_CONN_N - 19C6
K_CONN_N @single_brd_lib.SINGLE_BRD
90_AP_TO_LCM_MIPI_CL 90_AP_TO_LCM_MIPI_CLK_CONN_P - 19C6
K_CONN_P @single_brd_lib.SINGLE_BRD
90_AP_TO_LCM_MIPI_CL 90_AP_TO_LCM_MIPI_CLK_N - 7B8 19C7
K_N @single_brd_lib.SINGLE_BRD
90_AP_TO_LCM_MIPI_CL 90_AP_TO_LCM_MIPI_CLK_P - 7B8 19C7
K_P @single_brd_lib.SINGLE_BRD
90_AP_TO_LCM_MIPI_DA 90_AP_TO_LCM_MIPI_DATA1_CONN_N - 19C6
TA1_CONN_N @single_brd_lib.SINGLE_BRD
90_AP_TO_LCM_MIPI_DA 90_AP_TO_LCM_MIPI_DATA1_CONN_P - 19C6
TA1_CONN_P @single_brd_lib.SINGLE_BRD
90_AP_TO_LCM_MIPI_DA 90_AP_TO_LCM_MIPI_DATA1_N - 7B8 19C7
TA1_N @single_brd_lib.SINGLE_BRD
90_AP_TO_LCM_MIPI_DA 90_AP_TO_LCM_MIPI_DATA1_P - 7B8 19C7
TA1_P @single_brd_lib.SINGLE_BRD
90_CODEC_BI_TRISTAR_ 90_CODEC_BI_TRISTAR_MIKEYBUS_DIG_N 16D5
MIKEYBUS_DIG_N - @single_brd_lib.SINGLE_BRD
90_CODEC_BI_TRISTAR_ 90_CODEC_BI_TRISTAR_MIKEYBUS_DIG_P 16D5
MIKEYBUS_DIG_P - @single_brd_lib.SINGLE_BRD
90_CODEC_BI_TRISTAR_ 90_CODEC_BI_TRISTAR_MIKEYBUS_L67_N 9B4
MIKEYBUS_L67_N - @single_brd_lib.SINGLE_BRD
90_CODEC_BI_TRISTAR_ 90_CODEC_BI_TRISTAR_MIKEYBUS_L67_P 9B4
MIKEYBUS_L67_P - @single_brd_lib.SINGLE_BRD
90_CODEC_BI_TRISTAR_ 90_CODEC_BI_TRISTAR_MIKEYBUS_N - 9B1 16D6
MIKEYBUS_N @single_brd_lib.SINGLE_BRD
90_CODEC_BI_TRISTAR_ 90_CODEC_BI_TRISTAR_MIKEYBUS_P - 9B1 16D6
MIKEYBUS_P @single_brd_lib.SINGLE_BRD
90_FCAM_TO_AP_MIPI_C 90_FCAM_TO_AP_MIPI_CLK_CONN_N - 11C4
LK_CONN_N @single_brd_lib.SINGLE_BRD
90_FCAM_TO_AP_MIPI_C 90_FCAM_TO_AP_MIPI_CLK_CONN_P - 11C4
LK_CONN_P @single_brd_lib.SINGLE_BRD
90_FCAM_TO_AP_MIPI_C 90_FCAM_TO_AP_MIPI_CLK_N - 7B5 11D1
LK_N @single_brd_lib.SINGLE_BRD
90_FCAM_TO_AP_MIPI_C 90_FCAM_TO_AP_MIPI_CLK_P - 7B5 11D1
LK_P @single_brd_lib.SINGLE_BRD
90_FCAM_TO_AP_MIPI_D 90_FCAM_TO_AP_MIPI_DATA0_CONN_N - 11C4
ATA0_CONN_N @single_brd_lib.SINGLE_BRD
90_FCAM_TO_AP_MIPI_D 90_FCAM_TO_AP_MIPI_DATA0_CONN_P - 11C4
ATA0_CONN_P @single_brd_lib.SINGLE_BRD
90_FCAM_TO_AP_MIPI_D 90_FCAM_TO_AP_MIPI_DATA0_N - 7B5 11D1
ATA0_N @single_brd_lib.SINGLE_BRD
90_FCAM_TO_AP_MIPI_D 90_FCAM_TO_AP_MIPI_DATA0_P - 7B5 11D1
ATA0_P @single_brd_lib.SINGLE_BRD
90_RCAM_TO_AP_MIPI_C 90_RCAM_TO_AP_MIPI_CLK_CONN_N - 21B3
LK_CONN_N @single_brd_lib.SINGLE_BRD
90_RCAM_TO_AP_MIPI_C 90_RCAM_TO_AP_MIPI_CLK_CONN_P - 21B3
LK_CONN_P @single_brd_lib.SINGLE_BRD
90_RCAM_TO_AP_MIPI_C 90_RCAM_TO_AP_MIPI_CLK_N - 7C8 21B1
LK_N @single_brd_lib.SINGLE_BRD
90_RCAM_TO_AP_MIPI_C 90_RCAM_TO_AP_MIPI_CLK_P - 7C8 21B1
LK_P @single_brd_lib.SINGLE_BRD
90_RCAM_TO_AP_MIPI_D 90_RCAM_TO_AP_MIPI_DATA0_CONN_N - 21B3
ATA0_CONN_N @single_brd_lib.SINGLE_BRD
90_RCAM_TO_AP_MIPI_D 90_RCAM_TO_AP_MIPI_DATA0_CONN_P - 21B3
ATA0_CONN_P @single_brd_lib.SINGLE_BRD
90_RCAM_TO_AP_MIPI_D 90_RCAM_TO_AP_MIPI_DATA0_N - 7C8 21B1
ATA0_N @single_brd_lib.SINGLE_BRD
90_RCAM_TO_AP_MIPI_D 90_RCAM_TO_AP_MIPI_DATA0_P - 7C8 21B1
ATA0_P @single_brd_lib.SINGLE_BRD
90_RCAM_TO_AP_MIPI_D 90_RCAM_TO_AP_MIPI_DATA1_CONN_N - 21B3
ATA1_CONN_N @single_brd_lib.SINGLE_BRD
90_RCAM_TO_AP_MIPI_D 90_RCAM_TO_AP_MIPI_DATA1_CONN_P - 21B3
ATA1_CONN_P @single_brd_lib.SINGLE_BRD
90_RCAM_TO_AP_MIPI_D 90_RCAM_TO_AP_MIPI_DATA1_N - 7C8 21B1
ATA1_N @single_brd_lib.SINGLE_BRD
90_RCAM_TO_AP_MIPI_D 90_RCAM_TO_AP_MIPI_DATA1_P - 7C8 21B1
ATA1_P @single_brd_lib.SINGLE_BRD
90_RCAM_TO_AP_MIPI_D 90_RCAM_TO_AP_MIPI_DATA2_CONN_N - 21C3
ATA2_CONN_N @single_brd_lib.SINGLE_BRD
90_RCAM_TO_AP_MIPI_D 90_RCAM_TO_AP_MIPI_DATA2_CONN_P - 21C3
ATA2_CONN_P @single_brd_lib.SINGLE_BRD
90_RCAM_TO_AP_MIPI_D 90_RCAM_TO_AP_MIPI_DATA2_N - 7C8 21C1
ATA2_N @single_brd_lib.SINGLE_BRD
90_RCAM_TO_AP_MIPI_D 90_RCAM_TO_AP_MIPI_DATA2_P - 7C8 21C1
ATA2_P @single_brd_lib.SINGLE_BRD
90_RCAM_TO_AP_MIPI_D 90_RCAM_TO_AP_MIPI_DATA3_CONN_N - 21C3
ATA3_CONN_N @single_brd_lib.SINGLE_BRD
90_RCAM_TO_AP_MIPI_D 90_RCAM_TO_AP_MIPI_DATA3_CONN_P - 21C3

ATA3_CONN_P @single_brd_lib.SINGLE_BRD
90_RCAM_TO_AP_MIPI_D 90_RCAM_TO_AP_MIPI_DATA3_N - 7C8 21C1
ATA3_N @single_brd_lib.SINGLE_BRD
90_RCAM_TO_AP_MIPI_D 90_RCAM_TO_AP_MIPI_DATA3_P - 7C8 21C1
ATA3_P @single_brd_lib.SINGLE_BRD
90_TRISTAR_BI_BB_USB 90_TRISTAR_BI_BB_USB_N - 16C4 23C6
_N @single_brd_lib.SINGLE_BRD
90_BB_USB_D_N - 44C3 44C8 47A5
@single_brd_lib.RADIO_MLB(i624_page
23)
90_TRISTAR_BI_BB_USB 90_TRISTAR_BI_BB_USB_P - 16D4 23C6
_P @single_brd_lib.SINGLE_BRD
90_BB_USB_D_P - 44C3 44C8 47A5
@single_brd_lib.RADIO_MLB(i624_page
23)
90_TRISTAR_BI_E75_PA 90_TRISTAR_BI_E75_PAIR1_CONN_N - 17A4 17C4
IR1_CONN_N @single_brd_lib.SINGLE_BRD
90_TRISTAR_BI_E75_PA 90_TRISTAR_BI_E75_PAIR1_CONN_P - 17A4 17C4
IR1_CONN_P @single_brd_lib.SINGLE_BRD
90_TRISTAR_BI_E75_PA 90_TRISTAR_BI_E75_PAIR1_N - 16C2 17A3 17B1 22C3
IR1_N @single_brd_lib.SINGLE_BRD
90_TRISTAR_BI_E75_PA 90_TRISTAR_BI_E75_PAIR1_P - 16C2 17A3 17B1 22C3
IR1_P @single_brd_lib.SINGLE_BRD
90_TRISTAR_BI_E75_PA 90_TRISTAR_BI_E75_PAIR2_CONN_N - 17A4 17C3
IR2_CONN_N @single_brd_lib.SINGLE_BRD
90_TRISTAR_BI_E75_PA 90_TRISTAR_BI_E75_PAIR2_CONN_P - 17A4 17B3
IR2_CONN_P @single_brd_lib.SINGLE_BRD
90_TRISTAR_BI_E75_PA 90_TRISTAR_BI_E75_PAIR2_N - 16C2 17A3 17B1 22C3
IR2_N @single_brd_lib.SINGLE_BRD
90_TRISTAR_BI_E75_PA 90_TRISTAR_BI_E75_PAIR2_P - 16C2 17A3 17B1 22C3
IR2_P @single_brd_lib.SINGLE_BRD
ACCEL_TO_OSCAR_INT1 ACCEL_TO_OSCAR_INT1 - 20A3 20D7
@single_brd_lib.SINGLE_BRD
ACCEL_TO_OSCAR_INT2 ACCEL_TO_OSCAR_INT2 - 20A3 20C7
@single_brd_lib.SINGLE_BRD
ALS_TO_AP_INT_CONN_L ALS_TO_AP_INT_CONN_L - 11C5
@single_brd_lib.SINGLE_BRD
ALS_TO_AP_INT_L ALS_TO_AP_INT_L - 3C5 11B7
@single_brd_lib.SINGLE_BRD
ANTENNA_PAC_TO_BB_SP ANTENNA_PAC_TO_BB_SPI_MISO - 23A6
I_MISO @single_brd_lib.SINGLE_BRD
PAC_TO_BB_SPI_DATA_MISO - 44B8 48C4 62D7
@single_brd_lib.RADIO_MLB(i624_page
23)
AP_BI_BATTERY_SWI AP_BI_BATTERY_SWI - 3B5 13B4 22D5
@single_brd_lib.SINGLE_BRD
AP_BI_BATTERY_SWI_CO AP_BI_BATTERY_SWI_CONN - 22D7 22D8
NN @single_brd_lib.SINGLE_BRD
AP_BI_EEPROM_I2C_SDA AP_BI_EEPROM_I2C_SDA - 3C2 16B4
@single_brd_lib.SINGLE_BRD
AP_BI_FCAM_I2C_SDA AP_BI_FCAM_I2C_SDA - 7C4 11C7
@single_brd_lib.SINGLE_BRD
AP_BI_FCAM_SDA_CONN AP_BI_FCAM_SDA_CONN - 11D6
@single_brd_lib.SINGLE_BRD
AP_BI_I2C0_SDA AP_BI_I2C0_SDA - 3D1 13B6 14B7 14C6 15C6
@single_brd_lib.SINGLE_BRD 16C2
AP_BI_I2C1_SDA AP_BI_I2C1_SDA - 3D1 11B8
@single_brd_lib.SINGLE_BRD
AP_BI_I2C1_SDA_ALS_C AP_BI_I2C1_SDA_ALS_CONN - 11C5
ONN @single_brd_lib.SINGLE_BRD
AP_BI_NAND_ANC0_IO<0 AP_BI_NAND_ANC0_IO<0> - 6C5 6C8
> @single_brd_lib.SINGLE_BRD
AP_BI_NAND_ANC0_IO<1 AP_BI_NAND_ANC0_IO<1> - 6C5 6C8
> @single_brd_lib.SINGLE_BRD
AP_BI_NAND_ANC0_IO<2 AP_BI_NAND_ANC0_IO<2> - 6C5 6C8
> @single_brd_lib.SINGLE_BRD
AP_BI_NAND_ANC0_IO<3 AP_BI_NAND_ANC0_IO<3> - 6C5 6C8
> @single_brd_lib.SINGLE_BRD
AP_BI_NAND_ANC0_IO<4 AP_BI_NAND_ANC0_IO<4> - 6C5 6C8
> @single_brd_lib.SINGLE_BRD
AP_BI_NAND_ANC0_IO<5 AP_BI_NAND_ANC0_IO<5> - 6C5 6C8
> @single_brd_lib.SINGLE_BRD
AP_BI_NAND_ANC0_IO<6 AP_BI_NAND_ANC0_IO<6> - 6B7 6C5 6C8
> @single_brd_lib.SINGLE_BRD
AP_BI_NAND_ANC0_IO<7 AP_BI_NAND_ANC0_IO<7> - 6C5 6C8
> @single_brd_lib.SINGLE_BRD
AP_BI_NAND_ANC1_IO<0 AP_BI_NAND_ANC1_IO<0> - 6C5
> @single_brd_lib.SINGLE_BRD
AP_BI_NAND_ANC1_IO<1 AP_BI_NAND_ANC1_IO<1> - 6C5
> @single_brd_lib.SINGLE_BRD
AP_BI_NAND_ANC1_IO<2 AP_BI_NAND_ANC1_IO<2> - 6C5
> @single_brd_lib.SINGLE_BRD
AP_BI_NAND_ANC1_IO<3 AP_BI_NAND_ANC1_IO<3> - 6C5
> @single_brd_lib.SINGLE_BRD
AP_BI_NAND_ANC1_IO<4 AP_BI_NAND_ANC1_IO<4> - 6C5
> @single_brd_lib.SINGLE_BRD
AP_BI_NAND_ANC1_IO<5 AP_BI_NAND_ANC1_IO<5> - 6C5
> @single_brd_lib.SINGLE_BRD
AP_BI_NAND_ANC1_IO<6 AP_BI_NAND_ANC1_IO<6> - 6C5
> @single_brd_lib.SINGLE_BRD
AP_BI_NAND_ANC1_IO<7 AP_BI_NAND_ANC1_IO<7> - 6C5
> @single_brd_lib.SINGLE_BRD
AP_BI_OSCAR_SWDIO_1V AP_BI_OSCAR_SWDIO_1V8 - 3C2 20C5
8 @single_brd_lib.SINGLE_BRD
AP_BI_RCAM_I2C_SDA AP_BI_RCAM_I2C_SDA - 7C4 15A6 20C7 21B7
@single_brd_lib.SINGLE_BRD
AP_BI_RCAM_I2C_SDA_C AP_BI_RCAM_I2C_SDA_CONN - 21C4
ONN @single_brd_lib.SINGLE_BRD
AP_TO_BB_HSIC1_RDY AP_TO_BB_HSIC1_RDY - 3C2 23B6
@single_brd_lib.SINGLE_BRD
AP_HSIC1_RDY - 44C1 44C8 48B2
@single_brd_lib.RADIO_MLB(i624_page
23)
AP_TO_BB_I2S1_DOUT AP_TO_BB_I2S1_DOUT - 3C4 23C6
@single_brd_lib.SINGLE_BRD
BB_I2S_RXD - 44B6 44C8 48B4
@single_brd_lib.RADIO_MLB(i624_page
23)
AP_TO_BB_I2S1_LRCLK AP_TO_BB_I2S1_LRCLK - 3C4 23C6
@single_brd_lib.SINGLE_BRD
BB_I2S_WS - 44B6 44C8 48B4
@single_brd_lib.RADIO_MLB(i624_page
23)
AP_TO_BB_JTAG_TCK AP_TO_BB_JTAG_TCK - 3B7 23D3
@single_brd_lib.SINGLE_BRD
BB_JTAG_TCK - 44B8 44C3 47B5
@single_brd_lib.RADIO_MLB(i624_page
23)
AP_TO_BB_JTAG_TDI AP_TO_BB_JTAG_TDI - 3C7 23D3
@single_brd_lib.SINGLE_BRD
BB_JTAG_TDI - 44B8 44C3 47B5
@single_brd_lib.RADIO_MLB(i624_page
23)
AP_TO_BB_JTAG_TMS AP_TO_BB_JTAG_TMS - 3B7 23D3

@single_brd_lib.SINGLE_BRD
BB_JTAG_TMS - 44B8 44C3 47B5
@single_brd_lib.RADIO_MLB(i624_page
23)
AP_TO_BB_JTAG_TRST_L AP_TO_BB_JTAG_TRST_L - 3D5 23D3
@single_brd_lib.SINGLE_BRD
BB_JTAG_TRST_L - 44B8 44C3 47B5
@single_brd_lib.RADIO_MLB(i624_page
23)
AP_TO_BB_RST_L AP_TO_BB_RST_L - 3C8 23D6
@single_brd_lib.SINGLE_BRD
BB_RST_L - 44C1 44D8 46C8
@single_brd_lib.RADIO_MLB(i624_page
23)
AP_TO_BB_UART4_RTS_L AP_TO_BB_UART4_RTS_L - 3C5 23C6
@single_brd_lib.SINGLE_BRD
BB_UART_CTS_L - 44C3 44C8 48C4
@single_brd_lib.RADIO_MLB(i624_page
23)
AP_TO_BB_UART4_TXD AP_TO_BB_UART4_TXD - 3C5 16C4 23C6
@single_brd_lib.SINGLE_BRD
BB_UART_RXD - 44C3 44C8 48C4
@single_brd_lib.RADIO_MLB(i624_page
23)
AP_TO_BB_WAKE_MODEM AP_TO_BB_WAKE_MODEM - 3C8 23B6
@single_brd_lib.SINGLE_BRD
AP_WAKE_MODEM - 44D8 48B4
@single_brd_lib.RADIO_MLB(i624_page
23)
AP_TO_BT_I2S3_DOUT AP_TO_BT_I2S3_DOUT - 3C4 23B6
@single_brd_lib.SINGLE_BRD
BT_PCM_IN - 44B8 65B3
@single_brd_lib.RADIO_MLB(i624_page
23)
AP_TO_BT_I2S3_LRCLK AP_TO_BT_I2S3_LRCLK - 3C4 23B6
@single_brd_lib.SINGLE_BRD
BT_PCM_SYNC - 44B8 65B3
@single_brd_lib.RADIO_MLB(i624_page
23)
AP_TO_BT_UART1_RTS_L AP_TO_BT_UART1_RTS_L - 3C5 23B6
@single_brd_lib.SINGLE_BRD
BT_UART_CTS_L - 44B8 65B3
@single_brd_lib.RADIO_MLB(i624_page
23)
AP_TO_BT_UART1_TXD AP_TO_BT_UART1_TXD - 3C5 23B6
@single_brd_lib.SINGLE_BRD
BT_UART_RXD - 44B6 44B8 65C3
@single_brd_lib.RADIO_MLB(i624_page
23)
AP_TO_BT_WAKE AP_TO_BT_WAKE - 3C8 23B6
@single_brd_lib.SINGLE_BRD
BT_WAKE - 44B8 44D1 65C2
@single_brd_lib.RADIO_MLB(i624_page
23)
AP_TO_CODEC_ASP_I2S0 AP_TO_CODEC_ASP_I2S0_DOUT - 3D4 10C3
_DOUT @single_brd_lib.SINGLE_BRD
AP_TO_CODEC_ASP_I2S0 AP_TO_CODEC_ASP_I2S0_LRCLK - 3D4 10D3
_LRCLK @single_brd_lib.SINGLE_BRD
AP_TO_CODEC_SPI3_CLK AP_TO_CODEC_SPI3_CLK - 3B4 10C3
@single_brd_lib.SINGLE_BRD
AP_TO_CODEC_SPI3_CS_ AP_TO_CODEC_SPI3_CS_L - 3B4 10C3
L @single_brd_lib.SINGLE_BRD
AP_TO_CODEC_SPI3_MOS AP_TO_CODEC_SPI3_MOSI - 3B4 10C3
I @single_brd_lib.SINGLE_BRD
AP_TO_CODEC_VSP_I2S4 AP_TO_CODEC_VSP_I2S4_DOUT - 3C4 10C3
_DOUT @single_brd_lib.SINGLE_BRD
AP_TO_CODEC_VSP_I2S4 AP_TO_CODEC_VSP_I2S4_LRCLK - 3C4 10C3
_LRCLK @single_brd_lib.SINGLE_BRD
AP_TO_CODEC_XSP_I2S2 AP_TO_CODEC_XSP_I2S2_DOUT - 3C4 10C3 15C6
_DOUT @single_brd_lib.SINGLE_BRD
AP_TO_CODEC_XSP_I2S2 AP_TO_CODEC_XSP_I2S2_LRCLK - 3C4 10C3 15C6
_LRCLK @single_brd_lib.SINGLE_BRD
AP_TO_EEPROM_I2C_SCL AP_TO_EEPROM_I2C_SCL - 3C2 16B6
@single_brd_lib.SINGLE_BRD
AP_TO_FCAM_I2C_SCL AP_TO_FCAM_I2C_SCL - 7C4 11D7
@single_brd_lib.SINGLE_BRD
AP_TO_FCAM_SCL_CONN AP_TO_FCAM_SCL_CONN - 11D6
@single_brd_lib.SINGLE_BRD
AP_TO_FCAM_SHUTDOWN AP_TO_FCAM_SHUTDOWN - 7C5 11D8
@single_brd_lib.SINGLE_BRD
AP_TO_FCAM_SHUTDOWN_ AP_TO_FCAM_SHUTDOWN_CONN - 11D6
CONN @single_brd_lib.SINGLE_BRD
AP_TO_HEADSET_HS3_CT AP_TO_HEADSET_HS3_CTRL - 3C8 17C8
RL @single_brd_lib.SINGLE_BRD
AP_TO_HEADSET_HS3_CT AP_TO_HEADSET_HS3_CTRL_CONN - 17C7
RL_CONN @single_brd_lib.SINGLE_BRD
AP_TO_HEADSET_HS4_CT AP_TO_HEADSET_HS4_CTRL - 3C8 17B8
RL @single_brd_lib.SINGLE_BRD
AP_TO_HEADSET_HS4_CT AP_TO_HEADSET_HS4_CTRL_CONN - 17C4 17C6
RL_CONN @single_brd_lib.SINGLE_BRD
AP_TO_I2C0_SCL AP_TO_I2C0_SCL - 3D1 13B6 14B7 14C6 15C6
@single_brd_lib.SINGLE_BRD 16C2
AP_TO_I2C1_SCL AP_TO_I2C1_SCL - 3D1 11B7
@single_brd_lib.SINGLE_BRD
AP_TO_I2C1_SCL_ALS_C AP_TO_I2C1_SCL_ALS_CONN - 11C5
ONN @single_brd_lib.SINGLE_BRD
AP_TO_LCM_RESET_CONN AP_TO_LCM_RESET_CONN_L - 19C5
_L @single_brd_lib.SINGLE_BRD
AP_TO_LCM_RESET_L AP_TO_LCM_RESET_L - 3C8 19C2
@single_brd_lib.SINGLE_BRD
AP_TO_LEDDRV_EN AP_TO_LEDDRV_EN - 7C8 15A6
@single_brd_lib.SINGLE_BRD
AP_TO_NAND_ANC0_ALE AP_TO_NAND_ANC0_ALE - 6B8 6C2
@single_brd_lib.SINGLE_BRD
AP_TO_NAND_ANC0_CEN0 AP_TO_NAND_ANC0_CEN0_L - 6C2 6C8
_L @single_brd_lib.SINGLE_BRD
AP_TO_NAND_ANC0_CLE AP_TO_NAND_ANC0_CLE - 6B8 6C2
@single_brd_lib.SINGLE_BRD
AP_TO_NAND_ANC0_WE_L AP_TO_NAND_ANC0_WE_L - 6B8 6C2
@single_brd_lib.SINGLE_BRD
AP_TO_NAND_ANC1_ALE AP_TO_NAND_ANC1_ALE - 6B6 6C3
@single_brd_lib.SINGLE_BRD
AP_TO_NAND_ANC1_CEN0 AP_TO_NAND_ANC1_CEN0_L - 6C3 6C6
_L @single_brd_lib.SINGLE_BRD
AP_TO_NAND_ANC1_CLE AP_TO_NAND_ANC1_CLE - 6B6 6C3
@single_brd_lib.SINGLE_BRD
AP_TO_NAND_ANC1_WE_L AP_TO_NAND_ANC1_WE_L - 6B6 6C3
@single_brd_lib.SINGLE_BRD
AP_TO_NAND_ANC_DQVRE AP_TO_NAND_ANC_DQVREF - 6B2 6B6 6B8 6C5
F @single_brd_lib.SINGLE_BRD
AP_TO_NAVAJO_DAISY_C AP_TO_NAVAJO_DAISY_CHAIN - 3B8 17C1
HAIN @single_brd_lib.SINGLE_BRD
AP_TO_NAVAJO_SPI2_CL AP_TO_NAVAJO_SPI2_CLK - 3B5 17D1
K @single_brd_lib.SINGLE_BRD

8 7 6 5 4 3 2 1

AP_TO_NAVAJO_SPI2_CLK_CONN	AP_TO_NAVAJO_SPI2_CLK_CONN - @single_brd_lib.SINGLE_BRD	17C4 17D3
AP_TO_NAVAJO_SPI2_MOSI	AP_TO_NAVAJO_SPI2_MOSI - @single_brd_lib.SINGLE_BRD	3B5 17D1
AP_TO_NAVAJO_SPI2_MOSI_CONN	AP_TO_NAVAJO_SPI2_MOSI_CONN - @single_brd_lib.SINGLE_BRD	17C5 17D3
AP_TO_OSCAR_DBGEN	AP_TO_OSCAR_DBGEN - @single_brd_lib.SINGLE_BRD	3C8 20C5
AP_TO_OSCAR_RESET_L	AP_TO_OSCAR_RESET_L - @single_brd_lib.SINGLE_BRD	3C5 20C7
AP_TO_OSCAR_SWDCLK_1V8	AP_TO_OSCAR_SWDCLK_1V8 - @single_brd_lib.SINGLE_BRD	3C2 20C5
AP_TO_OSCAR_UART2_TXD	AP_TO_OSCAR_UART2_TXD - @single_brd_lib.SINGLE_BRD	3C5 20C5
AP_TO_PMU_KEEPACT	AP_TO_PMU_KEEPACT - @single_brd_lib.SINGLE_BRD	3C8 13B2
AP_TO_PMU_RESET_IN	AP_TO_PMU_RESET_IN - @single_brd_lib.SINGLE_BRD	2B3 13B6
AP_TO_PMU_SOCHOT1	AP_TO_PMU_SOCHOT1 - @single_brd_lib.SINGLE_BRD	3B1 13B6
AP_TO_PMU_SOCHOT1_H6P	AP_TO_PMU_SOCHOT1_H6P - @single_brd_lib.SINGLE_BRD	3B2
AP_TO_PMU_TEST_CLKOUT	AP_TO_PMU_TEST_CLKOUT - @single_brd_lib.SINGLE_BRD	2B3 13C6
AP_TO_PMU_VIBE_PWM_EN	AP_TO_PMU_VIBE_PWM_EN - @single_brd_lib.SINGLE_BRD	3C5 12B7
AP_TO_RADIO_ON_L	AP_TO_RADIO_ON_L - @single_brd_lib.SINGLE_BRD	3C8 23D6
	RADIO_ON_L - @single_brd_lib.RADIO_MLB(i624_page 23)	44D3 44D8 46C8
AP_TO_RCAM_I2C_SCL	AP_TO_RCAM_I2C_SCL - @single_brd_lib.SINGLE_BRD	7C4 15A6 20D5 21B7
AP_TO_RCAM_I2C_SCL_CONN	AP_TO_RCAM_I2C_SCL_CONN - @single_brd_lib.SINGLE_BRD	21C4
AP_TO_RCAM_SHUTDOWN	AP_TO_RCAM_SHUTDOWN - @single_brd_lib.SINGLE_BRD	7C5 21B7
AP_TO_RCAM_SHUTDOWN_CONN	AP_TO_RCAM_SHUTDOWN_CONN - @single_brd_lib.SINGLE_BRD	21B4
AP_TO_RCAM_VDDCORE_EN	AP_TO_RCAM_VDDCORE_EN - @single_brd_lib.SINGLE_BRD	3C5 21C7
AP_TO_SPKAMP_BEE_GEES	AP_TO_SPKAMP_BEE_GEES - @single_brd_lib.SINGLE_BRD	3D8 15C6
AP_TO_SPKAMP_RESET_L	AP_TO_SPKAMP_RESET_L - @single_brd_lib.SINGLE_BRD	3C8 15C7
AP_TO_TOUCH_GRAPE_RESET_L	AP_TO_TOUCH_GRAPE_RESET_L - @single_brd_lib.SINGLE_BRD	3C8 18B7
AP_TO_TOUCH_SPI1_CLK	AP_TO_TOUCH_SPI1_CLK - @single_brd_lib.SINGLE_BRD	3B4 18B8
AP_TO_TOUCH_SPI1_CS_L	AP_TO_TOUCH_SPI1_CS_L - @single_brd_lib.SINGLE_BRD	3B4 18B8
AP_TO_TOUCH_SPI1_MOSI	AP_TO_TOUCH_SPI1_MOSI - @single_brd_lib.SINGLE_BRD	3B4 18B8
AP_TO_TRISTAR_ACC_UART6_TXD	AP_TO_TRISTAR_ACC_UART6_TXD - @single_brd_lib.SINGLE_BRD	3B5 16C4
AP_TO_TRISTAR_DEBUG_UART0_TXD	AP_TO_TRISTAR_DEBUG_UART0_TXD - @single_brd_lib.SINGLE_BRD	3C5 16C4
AP_TO_WLAN_HSIC2_RDY	AP_TO_WLAN_HSIC2_RDY - @single_brd_lib.SINGLE_BRD	3C2 23B6
	AP_HSIC3_RDY - @single_brd_lib.RADIO_MLB(i624_page 23)	44C6 44C8 65B3
AP_TO_WLAN_UART3_TXD	AP_TO_WLAN_UART3_TXD - @single_brd_lib.SINGLE_BRD	3C5 23C6
	WLAN_UART_RXD - @single_brd_lib.RADIO_MLB(i624_page 23)	44C8 65B3
BATTERY_NTC_CONN	BATTERY_NTC_CONN - @single_brd_lib.SINGLE_BRD	17C4
BATTERY_TO_PMU_NTC	BATTERY_TO_PMU_NTC - @single_brd_lib.SINGLE_BRD	13A6 17C1 22C4
BATTERY_TO_PMU_SENSE	BATTERY_TO_PMU_SENSE - @single_brd_lib.SINGLE_BRD	12C7 22C4 22C6
BB_TO_ANTENNA_PAC_SPI_CS	BB_TO_ANTENNA_PAC_SPI_CS - @single_brd_lib.SINGLE_BRD	8B2 23A6
	BB_SPI_TO_PAC_CS - @single_brd_lib.RADIO_MLB(i624_page 23)	44B8 48C4 62D7
BB_TO_ANTENNA_PAC_SPI_MOSI	BB_TO_ANTENNA_PAC_SPI_MOSI - @single_brd_lib.SINGLE_BRD	8B2 23A6
	BB_SPI_TO_PAC_DATA_MOSI - @single_brd_lib.RADIO_MLB(i624_page 23)	44B8 48C4 62C7
BB_TO_ANTENNA_PAC_SPI_SCLK	BB_TO_ANTENNA_PAC_SPI_SCLK - @single_brd_lib.SINGLE_BRD	8C2 23A6
	BB_SPI_TO_PAC_CLK - @single_brd_lib.RADIO_MLB(i624_page 23)	44B8 48C4 62C7
BB_TO_ANT_PAC_SPI_CS_BUTTON_CONN_L	BB_TO_ANT_PAC_SPI_CS_BUTTON_CONN_L - @single_brd_lib.SINGLE_BRD	8C4
BB_TO_ANT_PAC_SPI_MOSI_BUTTON_CONN	BB_TO_ANT_PAC_SPI_MOSI_BUTTON_CONN - @single_brd_lib.SINGLE_BRD	8C4
BB_TO_ANT_PAC_SPI_SCLK_BUTTON_CONN	BB_TO_ANT_PAC_SPI_SCLK_BUTTON_CONN - @single_brd_lib.SINGLE_BRD	8C4
BB_TO_AP_HSIC1_RDY	BB_TO_AP_HSIC1_RDY - @single_brd_lib.SINGLE_BRD	3C2 23B6
	PBL_RUN_BB_HSIC1_RDY - @single_brd_lib.RADIO_MLB(i624_page 23)	44C1 44D8 48B2
BB_TO_AP_HSIC1_REMOTE_WAKE	BB_TO_AP_HSIC1_REMOTE_WAKE - @single_brd_lib.SINGLE_BRD	3C2 23B6
	BB_HSIC1_REMOTE_WAKE - @single_brd_lib.RADIO_MLB(i624_page 23)	44C8 48B2
BB_TO_AP_I2S1_DIN	BB_TO_AP_I2S1_DIN - @single_brd_lib.SINGLE_BRD	3C4 23C6
	BB_I2S_TXD - @single_brd_lib.RADIO_MLB(i624_page 23)	44A6 44C8 48B4
BB_TO_AP_IPC_GPIO	BB_TO_AP_IPC_GPIO - @single_brd_lib.SINGLE_BRD	7C8 23A6
	BB_IPC_GPIO - @single_brd_lib.RADIO_MLB(i624_page 23)	44A8 48B2
BB_TO_AP_JTAG_TDO	BB_TO_AP_JTAG_TDO - @single_brd_lib.SINGLE_BRD	3C7 23D3
	BB_JTAG_TDO - @single_brd_lib.RADIO_MLB(i624_page 23)	44B8 44C3 47B3
BB_TO_AP_PP_SYNC	BB_TO_AP_PP_SYNC - @single_brd_lib.SINGLE_BRD	3C5 23C6
	PP_SYNC - @single_brd_lib.RADIO_MLB(i624_page 23)	44C8 48B2

BB_TO_AP_RESET_DET_L	BB_TO_AP_RESET_DET_L - @single_brd_lib.SINGLE_BRD	3C8 23D6
	RESET_DET_L - @single_brd_lib.RADIO_MLB(i624_page 23)	44C1 44D8 48B2
BB_TO_AP_SOCHOT0	BB_TO_AP_SOCHOT0 - @single_brd_lib.SINGLE_BRD	3B1 23A6
	TX_GTR_THRESH_OD - @single_brd_lib.RADIO_MLB(i624_page 23)	44A8 48B2
BB_TO_AP_UART4_CTS_L	BB_TO_AP_UART4_CTS_L - @single_brd_lib.SINGLE_BRD	3C5 23C6
	BB_UART_RTS_L - @single_brd_lib.RADIO_MLB(i624_page 23)	44C3 44C8 48C4
BB_TO_AP_UART4_RXD	BB_TO_AP_UART4_RXD - @single_brd_lib.SINGLE_BRD	3C5 16C4 23C6
	BB_UART_TXD - @single_brd_lib.RADIO_MLB(i624_page 23)	44C3 44C8 48C4
BB_TO_LAT_SW1_CTL	BB_TO_LAT_SW1_CTL - @single_brd_lib.SINGLE_BRD	17B1 23A6
	LAT_SW1_CTL - @single_brd_lib.RADIO_MLB(i624_page 23)	44B8 44C1 48C2
BB_TO_LAT_SW2_CTL	BB_TO_LAT_SW2_CTL - @single_brd_lib.SINGLE_BRD	17B1 23A6
	LAT_SW2_CTL - @single_brd_lib.RADIO_MLB(i624_page 23)	44B8 48C2
BB_TO_LAT_SW3_CTL	BB_TO_LAT_SW3_CTL - @single_brd_lib.SINGLE_BRD	17B1 17C5 23A6
	LAT_SW3_CTL - @single_brd_lib.RADIO_MLB(i624_page 23)	44B8 48C2
BB_TO_LEDDRV_GSM_BLANK	BB_TO_LEDDRV_GSM_BLANK - @single_brd_lib.SINGLE_BRD	15A6 23D6
	TX_GTR_THRESH - @single_brd_lib.RADIO_MLB(i624_page 23)	44D8 48C2
BB_TO_PMU_HOST_WAKE	BB_TO_PMU_HOST_WAKE - @single_brd_lib.SINGLE_BRD	13B4 23C6
	HOST_WAKE_BB - @single_brd_lib.RADIO_MLB(i624_page 23)	44C1 44D8 48B2
BOARD_INFO	BOARD_INFO - @single_brd_lib.SINGLE_BRD	3A6 3B8 3C4 3C8 3C8
BT_TO_AP_I2S3_DIN	BT_TO_AP_I2S3_DIN - @single_brd_lib.SINGLE_BRD	3C4 23B6
	BT_PCM_OUT - @single_brd_lib.RADIO_MLB(i624_page 23)	44B8 65B3
BT_TO_AP_UART1_CTS_L	BT_TO_AP_UART1_CTS_L - @single_brd_lib.SINGLE_BRD	3C5 23B6
	BT_UART_RTS_L - @single_brd_lib.RADIO_MLB(i624_page 23)	44B8 65C3
BT_TO_AP_UART1_RXD	BT_TO_AP_UART1_RXD - @single_brd_lib.SINGLE_BRD	3C5 23B6
	BT_UART_TXD - @single_brd_lib.RADIO_MLB(i624_page 23)	44B6 44B8 65C3
BT_TO_PMU_HOST_WAKE	BT_TO_PMU_HOST_WAKE - @single_brd_lib.SINGLE_BRD	13B4 23B6
	HOST_WAKE_BT - @single_brd_lib.RADIO_MLB(i624_page 23)	44C8 65C3
BUTTON_TO_AP_HOLD_KEY_BUFF_L	BUTTON_TO_AP_HOLD_KEY_BUFF_L - @single_brd_lib.SINGLE_BRD	3A2 3D8 13C4 13C6
BUTTON_TO_AP_HOLD_KEY_CONN_L	BUTTON_TO_AP_HOLD_KEY_CONN_L - @single_brd_lib.SINGLE_BRD	8C5
BUTTON_TO_AP_HOLD_KEY_L	BUTTON_TO_AP_HOLD_KEY_L - @single_brd_lib.SINGLE_BRD	3A4 8B7
BUTTON_TO_AP_MENU_KEY_BUFF_L	BUTTON_TO_AP_MENU_KEY_BUFF_L - @single_brd_lib.SINGLE_BRD	3A2 3D8 13C4 13C6
BUTTON_TO_AP_MENU_KEY_CONN_L	BUTTON_TO_AP_MENU_KEY_CONN_L - @single_brd_lib.SINGLE_BRD	17C5
BUTTON_TO_AP_MENU_KEY_L	BUTTON_TO_AP_MENU_KEY_L - @single_brd_lib.SINGLE_BRD	3A4 17B8
BUTTON_TO_AP_RINGER_A	BUTTON_TO_AP_RINGER_A - @single_brd_lib.SINGLE_BRD	3C8 8B7 13C4 13C6
BUTTON_TO_AP_RINGER_A_CONN	BUTTON_TO_AP_RINGER_A_CONN - @single_brd_lib.SINGLE_BRD	8C5
BUTTON_TO_AP_VOL_DOWN_CONN_L	BUTTON_TO_AP_VOL_DOWN_CONN_L - @single_brd_lib.SINGLE_BRD	8C5
BUTTON_TO_AP_VOL_DOWN_L	BUTTON_TO_AP_VOL_DOWN_L - @single_brd_lib.SINGLE_BRD	3D8 8B7 13C6
BUTTON_TO_AP_VOL_UP_CONN_L	BUTTON_TO_AP_VOL_UP_CONN_L - @single_brd_lib.SINGLE_BRD	8C5
BUTTON_TO_AP_VOL_UP_L	BUTTON_TO_AP_VOL_UP_L - @single_brd_lib.SINGLE_BRD	3D8 8B7 13C6
CAM_NTC_N	CAM_NTC_N - @single_brd_lib.SINGLE_BRD	13B7
CAM_NTC_P	CAM_NTC_P - @single_brd_lib.SINGLE_BRD	13B7
CAM_TO_PMU_NTC_P	CAM_TO_PMU_NTC_P - @single_brd_lib.SINGLE_BRD	13B6
CHESTNUT_TO_PMU_ADCIN7	CHESTNUT_TO_PMU_ADCIN7 - @single_brd_lib.SINGLE_BRD	13C2 13C6 14C6
CODEC_MBUS_REF	CODEC_MBUS_REF - @single_brd_lib.SINGLE_BRD	9B3 17D5
CODEC_RESET_L	CODEC_RESET_L - @single_brd_lib.SINGLE_BRD	10C3
CODEC_TO_AP_ASP_I2S0_DIN	CODEC_TO_AP_ASP_I2S0_DIN - @single_brd_lib.SINGLE_BRD	3D4 10C3
CODEC_TO_AP_INT_L	CODEC_TO_AP_INT_L - @single_brd_lib.SINGLE_BRD	3C8 10C3
CODEC_TO_AP_SPI3_MISO	CODEC_TO_AP_SPI3_MISO - @single_brd_lib.SINGLE_BRD	3B4 10C3
CODEC_TO_AP_VSP_I2S4_DIN	CODEC_TO_AP_VSP_I2S4_DIN - @single_brd_lib.SINGLE_BRD	3C4 10C3
CODEC_TO_AP_XSP_I2S2_DIN	CODEC_TO_AP_XSP_I2S2_DIN - @single_brd_lib.SINGLE_BRD	3C4 10C3 15C6
CODEC_TO_HAC_CONN_N	CODEC_TO_HAC_CONN_N - @single_brd_lib.SINGLE_BRD	11A6
CODEC_TO_HAC_CONN_P	CODEC_TO_HAC_CONN_P - @single_brd_lib.SINGLE_BRD	11A6
CODEC_TO_HAC_N	CODEC_TO_HAC_N - @single_brd_lib.SINGLE_BRD	9C3 11A8
CODEC_TO_HAC_P	CODEC_TO_HAC_P - @single_brd_lib.SINGLE_BRD	9C3 11A8
CODEC_TO_HPHONE_HS3	CODEC_TO_HPHONE_HS3 - @single_brd_lib.SINGLE_BRD	9C3 17C8
CODEC_TO_HPHONE_HS3_	CODEC_TO_HPHONE_HS3_CONN -	17C4 17C6

CONN	@single_brd_lib.SINGLE_BRD	
CODEC_TO_HPHONE_HS3_REF	CODEC_TO_HPHONE_HS3_REF - @single_brd_lib.SINGLE_BRD	9B3 17C7
CODEC_TO_HPHONE_HS3_REF_CONN	CODEC_TO_HPHONE_HS3_REF_CONN - @single_brd_lib.SINGLE_BRD	17C5 22B5
CODEC_TO_HPHONE_HS4	CODEC_TO_HPHONE_HS4 - @single_brd_lib.SINGLE_BRD	9B3 17C8
CODEC_TO_HPHONE_HS4_CONN	CODEC_TO_HPHONE_HS4_CONN - @single_brd_lib.SINGLE_BRD	17C6
CODEC_TO_HPHONE_HS4_REF	CODEC_TO_HPHONE_HS4_REF - @single_brd_lib.SINGLE_BRD	9B3 17C7
CODEC_TO_HPHONE_HS4_REF_CONN	CODEC_TO_HPHONE_HS4_REF_CONN - @single_brd_lib.SINGLE_BRD	17C5 22B5
CODEC_TO_HPHONE_L	CODEC_TO_HPHONE_L - @single_brd_lib.SINGLE_BRD	9C2 17C1
CODEC_TO_HPHONE_L_CONN	CODEC_TO_HPHONE_L_CONN - @single_brd_lib.SINGLE_BRD	17C4
CODEC_TO_HPHONE_R	CODEC_TO_HPHONE_R - @single_brd_lib.SINGLE_BRD	9C2 17C1
CODEC_TO_HPHONE_R_CONN	CODEC_TO_HPHONE_R_CONN - @single_brd_lib.SINGLE_BRD	17C4
CODEC_TO_MIC2_BIAS_CONN	CODEC_TO_MIC2_BIAS_CONN - @single_brd_lib.SINGLE_BRD	8C4
CODEC_TO_PMU_MIKEY_INT_L	CODEC_TO_PMU_MIKEY_INT_L - @single_brd_lib.SINGLE_BRD	10C3 13B4
CODEC_TO_RCVR_CONN_N	CODEC_TO_RCVR_CONN_N - @single_brd_lib.SINGLE_BRD	11A6
CODEC_TO_RCVR_CONN_P	CODEC_TO_RCVR_CONN_P - @single_brd_lib.SINGLE_BRD	11A6
CODEC_TO_RCVR_N	CODEC_TO_RCVR_N - @single_brd_lib.SINGLE_BRD	9C3 11A8
CODEC_TO_RCVR_P	CODEC_TO_RCVR_P - @single_brd_lib.SINGLE_BRD	9C3 11A8
COMPASS_TO_OSCAR_INT	COMPASS_TO_OSCAR_INT - @single_brd_lib.SINGLE_BRD	20C7
COMPASS_TO_OSCAR_INT_FL	COMPASS_TO_OSCAR_INT_FL - @single_brd_lib.SINGLE_BRD	20A5 20D8
CUMULUS_TO_PROX_RX_EN_1V8	CUMULUS_TO_PROX_RX_EN_1V8 - @single_brd_lib.SINGLE_BRD	11C8 18B5
CUMULUS_TO_PROX_RX_EN_1V8_CONN	CUMULUS_TO_PROX_RX_EN_1V8_CONN - @single_brd_lib.SINGLE_BRD	11C5
CUMULUS_TO_PROX_TX_EN_1V8_L	CUMULUS_TO_PROX_TX_EN_1V8_L - @single_brd_lib.SINGLE_BRD	18A3 18B7
CUMULUS_TO_PROX_TX_EN_BUFF	CUMULUS_TO_PROX_TX_EN_BUFF - @single_brd_lib.SINGLE_BRD	11B2 18A4
CUMULUS_TO_SAGE_BOOST_EN	CUMULUS_TO_SAGE_BOOST_EN - @single_brd_lib.SINGLE_BRD	18B1 18B5
CUMULUS_TO_SAGE_GCM_SEL	CUMULUS_TO_SAGE_GCM_SEL - @single_brd_lib.SINGLE_BRD	18B1 18B5
CUMULUS_TO_SAGE_VSTM_OUT<0>	CUMULUS_TO_SAGE_VSTM_OUT<0> - @single_brd_lib.SINGLE_BRD	18B3 18B5
CUMULUS_TO_SAGE_VSTM_OUT<1>	CUMULUS_TO_SAGE_VSTM_OUT<1> - @single_brd_lib.SINGLE_BRD	18C3 18C5
CUMULUS_TO_SAGE_VSTM_OUT<2>	CUMULUS_TO_SAGE_VSTM_OUT<2> - @single_brd_lib.SINGLE_BRD	18B3 18C5
CUMULUS_TO_SAGE_VSTM_OUT<3>	CUMULUS_TO_SAGE_VSTM_OUT<3> - @single_brd_lib.SINGLE_BRD	18B3 18C5
CUMULUS_TO_SAGE_VSTM_OUT<4>	CUMULUS_TO_SAGE_VSTM_OUT<4> - @single_brd_lib.SINGLE_BRD	18C3 18C5
CUMULUS_TO_SAGE_VSTM_OUT<5>	CUMULUS_TO_SAGE_VSTM_OUT<5> - @single_brd_lib.SINGLE_BRD	18C3 18C5
CUMULUS_TO_SAGE_VSTM_OUT<6>	CUMULUS_TO_SAGE_VSTM_OUT<6> - @single_brd_lib.SINGLE_BRD	18B5 18C3
CUMULUS_TO_SAGE_VSTM_OUT<7>	CUMULUS_TO_SAGE_VSTM_OUT<7> - @single_brd_lib.SINGLE_BRD	18C3 18C5
CUMULUS_TO_SAGE_VSTM_OUT<8>	CUMULUS_TO_SAGE_VSTM_OUT<8> - @single_brd_lib.SINGLE_BRD	18C3 18C5
CUMULUS_TO_SAGE_VSTM_OUT<9>	CUMULUS_TO_SAGE_VSTM_OUT<9> - @single_brd_lib.SINGLE_BRD	18C6
CUMULUS_TO_SAGE_VSTM_OUT<10>	CUMULUS_TO_SAGE_VSTM_OUT<10> - @single_brd_lib.SINGLE_BRD	18C6
CUMULUS_TO_SAGE_VSTM_OUT<11>	CUMULUS_TO_SAGE_VSTM_OUT<11> - @single_brd_lib.SINGLE_BRD	18B3 18C5
CUMULUS_TO_SAGE_VSTM_OUT<12>	CUMULUS_TO_SAGE_VSTM_OUT<12> - @single_brd_lib.SINGLE_BRD	18B5 18C3
CUMULUS_TO_SAGE_VSTM_OUT<13>	CUMULUS_TO_SAGE_VSTM_OUT<13> - @single_brd_lib.SINGLE_BRD	18C3 18C5
CUMULUS_TO_SAGE_VSTM_OUT<14>	CUMULUS_TO_SAGE_VSTM_OUT<14> - @single_brd_lib.SINGLE_BRD	18B5 18C3
CUMULUS_TO_SAGE_VSTM_OUT<15>	CUMULUS_TO_SAGE_VSTM_OUT<15> - @single_brd_lib.SINGLE_BRD	18B5 18C3
CUMULUS_TO_SAGE_VSTM_OUT<16>	CUMULUS_TO_SAGE_VSTM_OUT<16> - @single_brd_lib.SINGLE_BRD	18B3 18C5
CUMULUS_TO_SAGE_VSTM_OUT<17>	CUMULUS_TO_SAGE_VSTM_OUT<17> - @single_brd_lib.SINGLE_BRD	18B3 18C5
CUMULUS_TO_SAGE_VSTM_OUT<18>	CUMULUS_TO_SAGE_VSTM_OUT<18> - @single_brd_lib.SINGLE_BRD	18C3 18C5
CUMULUS_TO_SAGE_VSTM_OUT<19>	CUMULUS_TO_SAGE_VSTM_OUT<19> - @single_brd_lib.SINGLE_BRD	18B5 18C3
E75_TO_PMU_ACC_DETECT	E75_TO_PMU_ACC_DETECT - @single_brd_lib.SINGLE_BRD	13C2 16C2 17A1
E75_TO_PMU_ACC_DETECT_CONN	E75_TO_PMU_ACC_DETECT_CONN - @single_brd_lib.SINGLE_BRD	17B4 22B3
E75_TO_PMU_ACC_DETECT_R	E75_TO_PMU_ACC_DETECT_R - @single_brd_lib.SINGLE_BRD	13C4
EXTMIC_TO_CODEC_L67_N	EXTMIC_TO_CODEC_L67_N - @single_brd_lib.SINGLE_BRD	9C5
EXTMIC_TO_CODEC_L67_P	EXTMIC_TO_CODEC_L67_P - @single_brd_lib.SINGLE_BRD	9C5
EXTMIC_TO_CODEC_N	EXTMIC_TO_CODEC_N - @single_brd_lib.SINGLE_BRD	9C7 17C7
EXTMIC_TO_CODEC_P	EXTMIC_TO_CODEC_P - @single_brd_lib.SINGLE_BRD	9C7 17C7
FCAM_TO_AP_ALS_INT_CONN_L	FCAM_TO_AP_ALS_INT_CONN_L - @single_brd_lib.SINGLE_BRD	11C4
FCAM_TO_AP_ALS_INT_L	FCAM_TO_AP_ALS_INT_L - @single_brd_lib.SINGLE_BRD	7C8 11B2
FORCE_DFU	FORCE_DFU - @single_brd_lib.SINGLE_BRD	3B8 3C8 22B4
FOREHEAD_NTC_N	FOREHEAD_NTC_N - @single_brd_lib.SINGLE_BRD	13C7
FOREHEAD_NTC_P	FOREHEAD_NTC_P - @single_brd_lib.SINGLE_BRD	13C7
FOREHEAD_TO_PMU_NTC_P	FOREHEAD_TO_PMU_NTC_P - @single_brd_lib.SINGLE_BRD	13B6
GYRO_PUMP	GYRO_PUMP - @single_brd_lib.SINGLE_BRD	20C3
GYRO_TO_OSCAR_INT1	GYRO_TO_OSCAR_INT1 - @single_brd_lib.SINGLE_BRD	20C3 20C7
GYRO_TO_OSCAR_INT2	GYRO_TO_OSCAR_INT2 - @single_brd_lib.SINGLE_BRD	20C1 20D7
H6P_NTC_N	H6P_NTC_N - @single_brd_lib.SINGLE_BRD	13A7
H6P_NTC_P	H6P_NTC_P -	13A7

	@single_brd_lib.SINGLE_BRD	
H6P_TO_PMU_NTC_P	H6P_TO_PMU_NTC_P - @single_brd_lib.SINGLE_BRD	13B6
HAC_TO_CODEC_TEST	HAC_TO_CODEC_TEST - @single_brd_lib.SINGLE_BRD	9A7 11A7
HAC_TO_CODEC_TEST_L67	HAC_TO_CODEC_TEST_L67 - @single_brd_lib.SINGLE_BRD	9B6
HPHONE_TO_CODEC_DET	HPHONE_TO_CODEC_DET - @single_brd_lib.SINGLE_BRD	9B3 17D7
HPHONE_TO_CODEC_DET_CONN	HPHONE_TO_CODEC_DET_CONN - @single_brd_lib.SINGLE_BRD	17C5
HPHONE_TO_CODEC_HPHONE_TEST	HPHONE_TO_CODEC_HPHONE_TEST - @single_brd_lib.SINGLE_BRD	9A7 17C2
HPHONE_TO_CODEC_HPHONE_TEST_L67	HPHONE_TO_CODEC_HPHONE_TEST_L67 - @single_brd_lib.SINGLE_BRD	9B6
IMU_TO_OSCAR_SPI_MISO	IMU_TO_OSCAR_SPI_MISO - @single_brd_lib.SINGLE_BRD	20D5
IMU_TO_OSCAR_SPI_MISO_FL	IMU_TO_OSCAR_SPI_MISO_FL - @single_brd_lib.SINGLE_BRD	20A5 20B1 20C1 20D4
L19_SPKAMP_VSENSE_N	L19_SPKAMP_VSENSE_N - @single_brd_lib.SINGLE_BRD	15C5
L19_SPKAMP_VSENSE_P	L19_SPKAMP_VSENSE_P - @single_brd_lib.SINGLE_BRD	15C5
LCM_DESENSE	LCM_DESENSE - @single_brd_lib.SINGLE_BRD	14B5
LCM_DESENSE_CONN	LCM_DESENSE_CONN - @single_brd_lib.SINGLE_BRD	19B4
LCM_TO_AP_HIFA_BSYNC	LCM_TO_AP_HIFA_BSYNC - @single_brd_lib.SINGLE_BRD	3C8 14C6 18A3 18B1 19C2
LCM_TO_AP_HIFA_BSYNC_BUFF	LCM_TO_AP_HIFA_BSYNC_BUFF - @single_brd_lib.SINGLE_BRD	18A4
LCM_TO_AP_HIFA_BSYNC_CONN	LCM_TO_AP_HIFA_BSYNC_CONN - @single_brd_lib.SINGLE_BRD	19C5
LCM_TO_AP_PANIC_L	LCM_TO_AP_PANIC_L - @single_brd_lib.SINGLE_BRD	19C5
LCM_TO_AP_PIFA	LCM_TO_AP_PIFA - @single_brd_lib.SINGLE_BRD	3B4 19B2
LCM_TO_AP_PIFA_CONN	LCM_TO_AP_PIFA_CONN - @single_brd_lib.SINGLE_BRD	19C5
LCM_TO_CHESTNUT_PWR_EN	LCM_TO_CHESTNUT_PWR_EN - @single_brd_lib.SINGLE_BRD	13C6 14C6 19D2
LCM_TO_CHESTNUT_PWR_EN_CONN	LCM_TO_CHESTNUT_PWR_EN_CONN - @single_brd_lib.SINGLE_BRD	19C5
MESA_BOOST_FB	MESA_BOOST_FB - @single_brd_lib.SINGLE_BRD	14B2
MESA_TO_BOOST_EN	MESA_TO_BOOST_EN - @single_brd_lib.SINGLE_BRD	14A4 17D7
MESA_TO_BOOST_EN_DOCK_CONN	MESA_TO_BOOST_EN_DOCK_CONN - @single_brd_lib.SINGLE_BRD	17C5
MIC1_TO_CODEC_L67_N	MIC1_TO_CODEC_L67_N - @single_brd_lib.SINGLE_BRD	9C5
MIC1_TO_CODEC_L67_P	MIC1_TO_CODEC_L67_P - @single_brd_lib.SINGLE_BRD	9C5
MIC1_TO_CODEC_N	MIC1_TO_CODEC_N - @single_brd_lib.SINGLE_BRD	9C7 17B8
MIC1_TO_CODEC_P	MIC1_TO_CODEC_P - @single_brd_lib.SINGLE_BRD	9C7 17B8 22B3
MIC2_TO_CODEC_L67_N	MIC2_TO_CODEC_L67_N - @single_brd_lib.SINGLE_BRD	9C5
MIC2_TO_CODEC_L67_P	MIC2_TO_CODEC_L67_P - @single_brd_lib.SINGLE_BRD	9C5
MIC2_TO_CODEC_N	MIC2_TO_CODEC_N - @single_brd_lib.SINGLE_BRD	8C2 9B7
MIC2_TO_CODEC_P	MIC2_TO_CODEC_P - @single_brd_lib.SINGLE_BRD	8C2 9B7 22B3
MIC3_TO_CODEC_L67_N	MIC3_TO_CODEC_L67_N - @single_brd_lib.SINGLE_BRD	9B5
MIC3_TO_CODEC_L67_P	MIC3_TO_CODEC_L67_P - @single_brd_lib.SINGLE_BRD	9C5
MIC3_TO_CODEC_N	MIC3_TO_CODEC_N - @single_brd_lib.SINGLE_BRD	9B7 11C2
MIC3_TO_CODEC_P	MIC3_TO_CODEC_P - @single_brd_lib.SINGLE_BRD	9B7 11C2 22B3
NAND_RDYBSY0	NAND_RDYBSY0 - @single_brd_lib.SINGLE_BRD	6C3
NAND_RDYBSY1	NAND_RDYBSY1 - @single_brd_lib.SINGLE_BRD	6B3
NAND_TO_PP_TCKC	NAND_TO_PP_TCKC - @single_brd_lib.SINGLE_BRD	6B4
NAND_TO_PP_TMSC	NAND_TO_PP_TMSC - @single_brd_lib.SINGLE_BRD	6B4
NAVAJO_TO_AP_SPI2_MISO	NAVAJO_TO_AP_SPI2_MISO - @single_brd_lib.SINGLE_BRD	3B5 17D1
NAVAJO_TO_AP_SPI2_MISO_CONN	NAVAJO_TO_AP_SPI2_MISO_CONN - @single_brd_lib.SINGLE_BRD	17D3
NAVAJO_TO_PMU_INT_CONN_L	NAVAJO_TO_PMU_INT_CONN_L - @single_brd_lib.SINGLE_BRD	17C5 17D3
NAVAJO_TO_PMU_INT_L	NAVAJO_TO_PMU_INT_L - @single_brd_lib.SINGLE_BRD	3B5 13B4 17D1
OSCAR_BI_AP_TIME_SYNC_HOST_INT	OSCAR_BI_AP_TIME_SYNC_HOST_INT - @single_brd_lib.SINGLE_BRD	3D5 20C7
OSCAR_TO_ACCEL_SPI_CS_L	OSCAR_TO_ACCEL_SPI_CS_L - @single_brd_lib.SINGLE_BRD	20B3 20D7
OSCAR_TO_AP_UART2_RXD	OSCAR_TO_AP_UART2_RXD - @single_brd_lib.SINGLE_BRD	3C5 20C5
OSCAR_TO_COMPASS_SPI_CS_FL_L	OSCAR_TO_COMPASS_SPI_CS_FL_L - @single_brd_lib.SINGLE_BRD	20A5 20D8
OSCAR_TO_COMPASS_SPI_CS_L	OSCAR_TO_COMPASS_SPI_CS_L - @single_brd_lib.SINGLE_BRD	20C6
OSCAR_TO_GYRO_SPI_CS_L	OSCAR_TO_GYRO_SPI_CS_L - @single_brd_lib.SINGLE_BRD	20C1 20D7
OSCAR_TO_IMU_SPI_MOSI	OSCAR_TO_IMU_SPI_MOSI - @single_brd_lib.SINGLE_BRD	20D5
OSCAR_TO_IMU_SPI_MOSI_FL	OSCAR_TO_IMU_SPI_MOSI_FL - @single_brd_lib.SINGLE_BRD	20A5 20B1 20C1 20D4
OSCAR_TO_IMU_SPI_SCLK	OSCAR_TO_IMU_SPI_SCLK - @single_brd_lib.SINGLE_BRD	20D5
OSCAR_TO_IMU_SPI_SCLK_FL	OSCAR_TO_IMU_SPI_SCLK_FL - @single_brd_lib.SINGLE_BRD	20A5 20B1 20C1 20D4
OSCAR_TO_PMU_HOST_WAKE	OSCAR_TO_PMU_HOST_WAKE - @single_brd_lib.SINGLE_BRD	3C5 13B4 20C7
OSCAR_TO_RADIO_CONTEXT_A	OSCAR_TO_RADIO_CONTEXT_A - @single_brd_lib.SINGLE_BRD	20C5 23A6
	OSCAR_CONTEXT_A - @single_brd_lib.RADIO_MLB(i624_page 23)	44A8 48B2 65B3
OSCAR_TO_RADIO_CONTEXT_B	OSCAR_TO_RADIO_CONTEXT_B - @single_brd_lib.SINGLE_BRD	20C5 23A6
	OSCAR_CONTEXT_B - @single_brd_lib.RADIO_MLB(i624_page 23)	44A8 48B2 65B3
PA_NTC_N	PA_NTC_N - @single_brd_lib.SINGLE_BRD	13B7
PA_NTC_P	PA_NTC_P -	13B7

	@single_brd_lib.SINGLE_BRD	
PA_TO_PMU_NTC_P	PA_TO_PMU_NTC_P - @single_brd_lib.SINGLE_BRD	13B6
PGND_CODEC_GNDCP	PGND_CODEC_GNDCP - @single_brd_lib.SINGLE_BRD	10B5
PGND_IRLED_DRAIN	PGND_IRLED_DRAIN - @single_brd_lib.SINGLE_BRD	11B4
PGND_IRLED_K	PGND_IRLED_K - @single_brd_lib.SINGLE_BRD	11C4
PGND_MIC1_TO_CODEC_RET	PGND_MIC1_TO_CODEC_RET - @single_brd_lib.SINGLE_BRD	10B8 17B8
PGND_MIC1_TO_CODEC_RET_FILT	PGND_MIC1_TO_CODEC_RET_FILT - @single_brd_lib.SINGLE_BRD	10B7
PGND_MIC2_3_TO_CODEC_RET	PGND_MIC2_3_TO_CODEC_RET - @single_brd_lib.SINGLE_BRD	8C2 10A8 11C4
PGND_MIC2_3_TO_CODEC_RET_FILT	PGND_MIC2_3_TO_CODEC_RET_FILT - @single_brd_lib.SINGLE_BRD	10B7
PGND_OPEL	PGND_OPEL - @single_brd_lib.SINGLE_BRD	15A4 15A4
PGND_RCAM_AF_RET	PGND_RCAM_AF_RET - @single_brd_lib.SINGLE_BRD	12B1 21C4
PGND_SCREW_HOLE1	PGND_SCREW_HOLE1 - @single_brd_lib.SINGLE_BRD	22A7
PGND_STANDOFF1	PGND_STANDOFF1 - @single_brd_lib.SINGLE_BRD	22A6
PGND_STANDOFF2	PGND_STANDOFF2 - @single_brd_lib.SINGLE_BRD	22A6
PGND_STROBE_RETURN	PGND_STROBE_RETURN - @single_brd_lib.SINGLE_BRD	8D7 15A4
PMU_ACT_DIO	PMU_ACT_DIO - @single_brd_lib.SINGLE_BRD	12C6
PMU_TO_AP_IRQ_L	PMU_TO_AP_IRQ_L - @single_brd_lib.SINGLE_BRD	3C8 13B6
PMU_TO_BB_RST_L	PMU_TO_BB_RST_L - @single_brd_lib.SINGLE_BRD	13B3 23D6
	RESET_PMU_L - @single_brd_lib.RADIO_MLB(i624_page 23)	44D3 44D8 46C8
PMU_TO_BB_RST_R_L	PMU_TO_BB_RST_R_L - @single_brd_lib.SINGLE_BRD	13B4
PMU_TO_BB_VBUS_DET	PMU_TO_BB_VBUS_DET - @single_brd_lib.SINGLE_BRD	13B4 23C6
	BB_USB_VBUS - @single_brd_lib.RADIO_MLB(i624_page 23)	44C3 44C8 47A5
PMU_TO_BT_REG_ON	PMU_TO_BT_REG_ON - @single_brd_lib.SINGLE_BRD	13B3 23B6
	BT_REG_ON - @single_brd_lib.RADIO_MLB(i624_page 23)	44B8 44C1 65C6
PMU_TO_BT_REG_ON_R	PMU_TO_BT_REG_ON_R - @single_brd_lib.SINGLE_BRD	13B4
PMU_TO_TP_AMUX_AY	PMU_TO_TP_AMUX_AY - @single_brd_lib.SINGLE_BRD	13C6 22C4
PMU_TO_TP_AMUX_BY	PMU_TO_TP_AMUX_BY - @single_brd_lib.SINGLE_BRD	13B6 22C4
PMU_TO_WLAN_REG_ON	PMU_TO_WLAN_REG_ON - @single_brd_lib.SINGLE_BRD	13B3 23C6
	WLAN_REG_ON - @single_brd_lib.RADIO_MLB(i624_page 23)	44C1 44C8 65C6
PMU_TO_WLAN_REG_ON_R	PMU_TO_WLAN_REG_ON_R - @single_brd_lib.SINGLE_BRD	13B4
PN5V7_LCM_AVDDN	PN5V7_LCM_AVDDN - @single_brd_lib.SINGLE_BRD	19C5
PN5V7_SAGE_AVDDN	PN5V7_SAGE_AVDDN - @single_brd_lib.SINGLE_BRD	14C3 18D4 19D2
PN5V7_SAGE_AVDDN_FILT	PN5V7_SAGE_AVDDN_FILT - @single_brd_lib.SINGLE_BRD	18D3
PP1V0	PP1V0 - @single_brd_lib.SINGLE_BRD	2C3 7C3 7D8 12A2
PP1V0_SOC	PP1V0_SOC - @single_brd_lib.SINGLE_BRD	4D6 12C3
PP1V0_SRAM	PP1V0_SRAM - @single_brd_lib.SINGLE_BRD	5C3 12C1
PP1V1_CPU	PP1V1_CPU - @single_brd_lib.SINGLE_BRD	4D3 12D3
PP1V1_GPU	PP1V1_GPU - @single_brd_lib.SINGLE_BRD	4D3 12C3
PP1V2	PP1V2 - @single_brd_lib.SINGLE_BRD	2C6 4A6 4B8 5D5 12B5
PP1V2_NAND_VDDI	PP1V2_NAND_VDDI - @single_brd_lib.SINGLE_BRD	6D4
PP1V2_OSCAR	PP1V2_OSCAR - @single_brd_lib.SINGLE_BRD	12B5 20D7
PP1V2_OSCAR_VDDC	PP1V2_OSCAR_VDDC - @single_brd_lib.SINGLE_BRD	20D6
PP1V2_RCAM_CONN	PP1V2_RCAM_CONN - @single_brd_lib.SINGLE_BRD	21B4
PP1V2_RCAM_SWITCHOUT	PP1V2_RCAM_SWITCHOUT - @single_brd_lib.SINGLE_BRD	21C6
PP1V2_SDRAM	PP1V2_SDRAM - @single_brd_lib.SINGLE_BRD	4A8 4C8 4D8 12B7 12D1 21C7
PP1V8	PP1V8 - @single_brd_lib.SINGLE_BRD	2B7 2C6 3A6 3B1 3B1 3B5 3B8 3D1 5A3 5B5 6C8 6D1 7C2 7C4 7D5 10C7 11C2 12B5 14B7 16B4 18D1 19C2 19D2 21C7
PP1V8_ALWAYS	PP1V8_ALWAYS - @single_brd_lib.SINGLE_BRD	3A4 3B4 12A2
PP1V8_COMP	PP1V8_COMP - @single_brd_lib.SINGLE_BRD	20A7 20B6
PP1V8_CUMULUS_VDDLDO	PP1V8_CUMULUS_VDDLDO - @single_brd_lib.SINGLE_BRD	18B7 18D6
PP1V8_FCAM_CONN	PP1V8_FCAM_CONN - @single_brd_lib.SINGLE_BRD	11C4
PP1V8_GRAPE	PP1V8_GRAPE - @single_brd_lib.SINGLE_BRD	12B5 18A3 18B5 18D5
PP1V8_LCM_CONN	PP1V8_LCM_CONN - @single_brd_lib.SINGLE_BRD	19C5
PP1V8_OSCAR	PP1V8_OSCAR - @single_brd_lib.SINGLE_BRD	12B5 20B1 20B5 20C8 20D1 20D5
PP1V8_OSCAR_VDDIO	PP1V8_OSCAR_VDDIO - @single_brd_lib.SINGLE_BRD	20D6
PP1V8_PLL	PP1V8_PLL - @single_brd_lib.SINGLE_BRD	2C5
PP1V8_RCAM_CONN	PP1V8_RCAM_CONN - @single_brd_lib.SINGLE_BRD	21B4
PP1V8_SDRAM	PP1V8_SDRAM - @single_brd_lib.SINGLE_BRD	3C8 4B8 10C3 10C7 12D1 14B7 16D4 17D7 23D6
	PP_WL_BT_VDDIO_AP - @single_brd_lib.RADIO_MLB(i624_page 23)	44C8 65C3
PP1V8_SDRAM_DOCK_CONN	PP1V8_SDRAM_DOCK_CONN - @single_brd_lib.SINGLE_BRD	17C5
PP1V8_VA_L19_L67	PP1V8_VA_L19_L67 -	10C7 12A2 15D4
	@single_brd_lib.SINGLE_BRD	
PP1V8_XTAL	PP1V8_XTAL - @single_brd_lib.SINGLE_BRD	5A4
PP2V5_RCAM_AF	PP2V5_RCAM_AF - @single_brd_lib.SINGLE_BRD	12A2 12B2 21D7
PP2V5_RCAM_AF_COMP	PP2V5_RCAM_AF_COMP - @single_brd_lib.SINGLE_BRD	12B1 21D7
PP2V5_RCAM_AF_CONN	PP2V5_RCAM_AF_CONN - @single_brd_lib.SINGLE_BRD	21C4
PP2V8_CAM_AVDD	PP2V8_CAM_AVDD - @single_brd_lib.SINGLE_BRD	11D2 12A2 21B7
PP2V8_FCAM_CONN	PP2V8_FCAM_CONN - @single_brd_lib.SINGLE_BRD	11C4
PP2V8_RCAM_CONN	PP2V8_RCAM_CONN - @single_brd_lib.SINGLE_BRD	21B4
PP3V0_ACC	PP3V0_ACC - @single_brd_lib.SINGLE_BRD	12A2 16D3
PP3V0_ALS	PP3V0_ALS - @single_brd_lib.SINGLE_BRD	11C5
PP3V0_COMP	PP3V0_COMP - @single_brd_lib.SINGLE_BRD	20B7
PP3V0_IMU	PP3V0_IMU - @single_brd_lib.SINGLE_BRD	12A2 20B3 20B7 20D3
PP3V0_NAND	PP3V0_NAND - @single_brd_lib.SINGLE_BRD	6D1 12A2
PP3V0_NAND_XW	PP3V0_NAND_XW - @single_brd_lib.SINGLE_BRD	6D3
PP3V0_NAVAJO	PP3V0_NAVAJO - @single_brd_lib.SINGLE_BRD	12A2 17D1
PP3V0_NAVAJO_CONN	PP3V0_NAVAJO_CONN - @single_brd_lib.SINGLE_BRD	17C4
PP3V0_PROX	PP3V0_PROX - @single_brd_lib.SINGLE_BRD	11C6
PP3V0_PROX_ALS	PP3V0_PROX_ALS - @single_brd_lib.SINGLE_BRD	11B8 11C8 12A2
PP3V0_PROX_IRLED	PP3V0_PROX_IRLED - @single_brd_lib.SINGLE_BRD	11A2 12A2
PP3V0_SDRAM	PP3V0_SDRAM - @single_brd_lib.SINGLE_BRD	8C7 12A2 16D6
PP3V3_USB	PP3V3_USB - @single_brd_lib.SINGLE_BRD	2C3 12B2
PP5V0_USB_CONN	PP5V0_USB_CONN - @single_brd_lib.SINGLE_BRD	17A6 22D4
PP5V0_USB_PROT	PP5V0_USB_PROT - @single_brd_lib.SINGLE_BRD	12D8 16D1 17A8
PP5V1_GRAPE_VDDH	PP5V1_GRAPE_VDDH - @single_brd_lib.SINGLE_BRD	14C3 18D7
PP5V7_LCM_AVDDH	PP5V7_LCM_AVDDH - @single_brd_lib.SINGLE_BRD	14C3 19D2
PP5V7_LCM_AVDDH_CONN	PP5V7_LCM_AVDDH_CONN - @single_brd_lib.SINGLE_BRD	19C5
PP5V7_SAGE_AVDDH	PP5V7_SAGE_AVDDH - @single_brd_lib.SINGLE_BRD	14C3 18B4 18D3
PP6V0_LCM_BOOST	PP6V0_LCM_BOOST - @single_brd_lib.SINGLE_BRD	14C4
PP18V0_MESA	PP18V0_MESA - @single_brd_lib.SINGLE_BRD	14B1 17D7
PP18V0_MESA_DOCK_CONN	PP18V0_MESA_DOCK_CONN - @single_brd_lib.SINGLE_BRD	17C5
PP18V0_MESA_SW	PP18V0_MESA_SW - @single_brd_lib.SINGLE_BRD	14B3
PP_BATT_VCC	PP_BATT_VCC - @single_brd_lib.SINGLE_BRD	12C8 15B7 15D7 22D4 22D5 22D8 23D6
	PP_BATT_VCC_CONN - @single_brd_lib.RADIO_MLB(i624_page 23)	44D1 44D8 45C8 53D7 54D5 55C5 56D6 57C5 58C6
PP_BATT_VCC_L19_VP	PP_BATT_VCC_L19_VP - @single_brd_lib.SINGLE_BRD	15D6
PP_BUCK0_LX0	PP_BUCK0_LX0 - @single_brd_lib.SINGLE_BRD	12D5
PP_BUCK0_LX1	PP_BUCK0_LX1 - @single_brd_lib.SINGLE_BRD	12D5
PP_BUCK0_LX2	PP_BUCK0_LX2 - @single_brd_lib.SINGLE_BRD	12C5
PP_BUCK0_LX3	PP_BUCK0_LX3 - @single_brd_lib.SINGLE_BRD	12C5
PP_BUCK1_LX0	PP_BUCK1_LX0 - @single_brd_lib.SINGLE_BRD	12C5
PP_BUCK1_LX1	PP_BUCK1_LX1 - @single_brd_lib.SINGLE_BRD	12C5
PP_BUCK2_LX	PP_BUCK2_LX - @single_brd_lib.SINGLE_BRD	12C5
PP_BUCK3_LX	PP_BUCK3_LX - @single_brd_lib.SINGLE_BRD	12C5
PP_BUCK4_LX	PP_BUCK4_LX - @single_brd_lib.SINGLE_BRD	12B5
PP_BUCK5_LX	PP_BUCK5_LX - @single_brd_lib.SINGLE_BRD	12B5
PP_CHESTNUT_CN	PP_CHESTNUT_CN - @single_brd_lib.SINGLE_BRD	14D4
PP_CHESTNUT_CP	PP_CHESTNUT_CP - @single_brd_lib.SINGLE_BRD	14D4
PP_CHESTNUT_LXP	PP_CHESTNUT_LXP - @single_brd_lib.SINGLE_BRD	14D6
PP_CODEC_FILT+	PP_CODEC_FILT+ - @single_brd_lib.SINGLE_BRD	10B5
PP_CODEC_SPKR_VQ	PP_CODEC_SPKR_VQ - @single_brd_lib.SINGLE_BRD	10B5
PP_CODEC_TO_MIC1_BIAS	PP_CODEC_TO_MIC1_BIAS - @single_brd_lib.SINGLE_BRD	10B7 17B8
PP_CODEC_TO_MIC1_BIAS_CONN	PP_CODEC_TO_MIC1_BIAS_CONN - @single_brd_lib.SINGLE_BRD	17B6
PP_CODEC_TO_MIC2_3_BIAS	PP_CODEC_TO_MIC2_3_BIAS - @single_brd_lib.SINGLE_BRD	8C2 10B7 11B2
PP_CODEC_TO_MIC3_BIAS_CONN	PP_CODEC_TO_MIC3_BIAS_CONN - @single_brd_lib.SINGLE_BRD	11C4
PP_CODEC_VCPFILT+	PP_CODEC_VCPFILT+ - @single_brd_lib.SINGLE_BRD	10C5
PP_CODEC_VCPFILT-	PP_CODEC_VCPFILT- - @single_brd_lib.SINGLE_BRD	10B5
PP_CODEC_VHP_FLYC	PP_CODEC_VHP_FLYC - @single_brd_lib.SINGLE_BRD	10C5
PP_CODEC_VHP_FLYN	PP_CODEC_VHP_FLYN - @single_brd_lib.SINGLE_BRD	10C5
PP_CODEC_VHP_FLYP	PP_CODEC_VHP_FLYP - @single_brd_lib.SINGLE_BRD	10C5
PP_CUMULUS_VDDANA	PP_CUMULUS_VDDANA - @single_brd_lib.SINGLE_BRD	18C7
PP_CUMULUS_VDDCORE	PP_CUMULUS_VDDCORE - @single_brd_lib.SINGLE_BRD	18C7
PP_E75_TO_TRISTAR_ACC1	PP_E75_TO_TRISTAR_ACC1 - @single_brd_lib.SINGLE_BRD	16D2 17A1
PP_E75_TO_TRISTAR_ACC1_CONN	PP_E75_TO_TRISTAR_ACC1_CONN - @single_brd_lib.SINGLE_BRD	17B4 22C3
PP_E75_TO_TRISTAR_ACC2	PP_E75_TO_TRISTAR_ACC2 - @single_brd_lib.SINGLE_BRD	16D2 17A1
PP_E75_TO_TRISTAR_ACC2_CONN	PP_E75_TO_TRISTAR_ACC2_CONN - @single_brd_lib.SINGLE_BRD	17B4 22C3
PP_EXTMIC_BIAS	PP_EXTMIC_BIAS - @single_brd_lib.SINGLE_BRD	10B7
PP_EXTMIC_BIAS_FILT	PP_EXTMIC_BIAS_FILT - @single_brd_lib.SINGLE_BRD	10B7
PP_EXTMIC_BIAS_FILT_IN	PP_EXTMIC_BIAS_FILT_IN - @single_brd_lib.SINGLE_BRD	10B7
PP_EXTMIC_BIAS_IN	PP_EXTMIC_BIAS_IN - @single_brd_lib.SINGLE_BRD	10B7
PP_L19_VBOOST	PP_L19_VBOOST - @single_brd_lib.SINGLE_BRD	15D6
PP_LCM_BL_ANODE	PP_LCM_BL_ANODE - @single_brd_lib.SINGLE_BRD	14B5 19B2
PP_LCM_BL_ANODE_CONN	PP_LCM_BL_ANODE_CONN - @single_brd_lib.SINGLE_BRD	19C5 22A5
PP_LCM_BL_CAT1	PP_LCM_BL_CAT1 - @single_brd_lib.SINGLE_BRD	14B6 19A2
PP_LCM_BL_CAT1_CONN	PP_LCM_BL_CAT1_CONN - @single_brd_lib.SINGLE_BRD	19C5 22A5
PP_LCM_BL_CAT2	PP_LCM_BL_CAT2 - @single_brd_lib.SINGLE_BRD	14B6 19A2
PP_LCM_BL_CAT2_CONN	PP_LCM_BL_CAT2_CONN - @single_brd_lib.SINGLE_BRD	19C5 22A5
PP_LDO14_2P65	PP_LDO14_2P65 - @single_brd_lib.SINGLE_BRD	17A7 23D6
	PP_LDO14_2V65 - @single_brd_lib.RADIO_MLB(i624_page 23)	44B8 45B1 52B6 53B4 53D4 59C6 59D3 60D4 62D1 62D3
PP_LED_BOOST_OUT	PP_LED_BOOST_OUT - @single_brd_lib.SINGLE_BRD	15B5
PP_LED_DRV_LX	PP_LED_DRV_LX - @single_brd_lib.SINGLE_BRD	15B5
PP_MIPI0D_VREG	PP_MIPI0D_VREG - @single_brd_lib.SINGLE_BRD	7D6
PP_MIPI1D_VREG	PP_MIPI1D_VREG - @single_brd_lib.SINGLE_BRD	7D6
PP_PMU_TO_VIBE	PP_PMU_TO_VIBE - @single_brd_lib.SINGLE_BRD	8C7 12B7
PP_PMU_TO_VIBE_CONN	PP_PMU_TO_VIBE_CONN - @single_brd_lib.SINGLE_BRD	8C6
PP_PMU_VCENTER	PP_PMU_VCENTER - @single_brd_lib.SINGLE_BRD	12D7
PP_PMU_VDD_REF	PP_PMU_VDD_REF - @single_brd_lib.SINGLE_BRD	13C4
PP_PMU_VDD_RTC	PP_PMU_VDD_RTC - @single_brd_lib.SINGLE_BRD	13C4
PP_PMU_VREF	PP_PMU_VREF - @single_brd_lib.SINGLE_BRD	13C4
PP_PMU_VSW_CHG	PP_PMU_VSW_CHG - @single_brd_lib.SINGLE_BRD	12C7
PP_SAGE_LX	PP_SAGE_LX - @single_brd_lib.SINGLE_BRD	18B3
PP_SAGE_LY	PP_SAGE_LY - @single_brd_lib.SINGLE_BRD	18B3
PP_SAGE_TO_TOUCH_VCPH	PP_SAGE_TO_TOUCH_VCPH - @single_brd_lib.SINGLE_BRD	18A5 18D3
PP_SAGE_TO_TOUCH_VCPH_CONN	PP_SAGE_TO_TOUCH_VCPH_CONN - @single_brd_lib.SINGLE_BRD	18A6 18A8
PP_SAGE_TO_TOUCH_VCPL	PP_SAGE_TO_TOUCH_VCPL - @single_brd_lib.SINGLE_BRD	18A5 18D5 19C7
PP_SAGE_TO_TOUCH_VCPL_CONN	PP_SAGE_TO_TOUCH_VCPL_CONN - @single_brd_lib.SINGLE_BRD	18A6 18A8
PP_SAGE_VBST_OUTH	PP_SAGE_VBST_OUTH - @single_brd_lib.SINGLE_BRD	18B3
PP_SAGE_VBST_OUTL	PP_SAGE_VBST_OUTL - @single_brd_lib.SINGLE_BRD	18B3
PP_SAGE_VCPL_F	PP_SAGE_VCPL_F - @single_brd_lib.SINGLE_BRD	18B4 18D1
PP_SPKAMP_FILT	PP_SPKAMP_FILT - @single_brd_lib.SINGLE_BRD	15C5
PP_SPKAMP_LDO_FILT	PP_SPKAMP_LDO_FILT - @single_brd_lib.SINGLE_BRD	15C5
PP_SPKAMP_SW	PP_SPKAMP_SW - @single_brd_lib.SINGLE_BRD	15C6
PP_STRB_DRIVER_TO_LED_COOL	PP_STRB_DRIVER_TO_LED_COOL - @single_brd_lib.SINGLE_BRD	8B2 15A3
PP_STRB_DRIVER_TO_LED_WARM	PP_STRB_DRIVER_TO_LED_WARM - @single_brd_lib.SINGLE_BRD	8D7 15A3
PP_VCC_MAIN	PP_VCC_MAIN - @single_brd_lib.SINGLE_BRD	10D7 12A8 12B7 12C8 13C2 14B4 14B8 14D6 23D6
	PP_VCC_MAIN_WLAN - @single_brd_lib.RADIO_MLB(i624_page 23)	44D8 65D6
PP_VCC_MAIN_CODEC	PP_VCC_MAIN_CODEC - @single_brd_lib.SINGLE_BRD	10D7
PP_WLED_LX	PP_WLED_LX - @single_brd_lib.SINGLE_BRD	14B7
RADIO_TO_PMU_ADC_LDO6_RUIM_1V8	RADIO_TO_PMU_ADC_LDO6_RUIM_1V8 - @single_brd_lib.SINGLE_BRD	13C6 23C6
	ADC_LDO6_RUIM_1V8 - @single_brd_lib.RADIO_MLB(i624_page 23)	44A7 44B8
RADIO_TO_PMU_ADC_LVS1	RADIO_TO_PMU_ADC_LVS1 - @single_brd_lib.SINGLE_BRD	13C6 23C6
	ADC_LVS1 - @single_brd_lib.RADIO_MLB(i624_page 23)	44A7 44A8
RADIO_TO_PMU_ADC_SMPS1_MSMC_1V05	RADIO_TO_PMU_ADC_SMPS1_MSMC_1V05 - @single_brd_lib.SINGLE_BRD	13C6 23C6
	ADC_SMPS1_MSMC_1V05 - @single_brd_lib.RADIO_MLB(i624_page 23)	44A7 44B8
RADIO_TO_PMU_ADC_SMPS3_MSME_1V8	RADIO_TO_PMU_ADC_SMPS3_MSME_1V8 - @single_brd_lib.SINGLE_BRD	13C6 23C6
	ADC_SMPS3_MSME_1V8 - @single_brd_lib.RADIO_MLB(i624_page 23)	44A7 44B8
RCAM_TO_LEDDRV_STROBE_EN	RCAM_TO_LEDDRV_STROBE_EN - @single_brd_lib.SINGLE_BRD	15A6 21A7
RCAM_TO_LEDDRV_STROBE_EN_CONN	RCAM_TO_LEDDRV_STROBE_EN_CONN - @single_brd_lib.SINGLE_BRD	21B4
RCAM_TO_STROBE_NTC	RCAM_TO_STROBE_NTC - @single_brd_lib.SINGLE_BRD	8D2 15A3
RCAM_TO_STROBE_NTC_CONN	RCAM_TO_STROBE_NTC_CONN - @single_brd_lib.SINGLE_BRD	8D3
RCVR_TO_CODEC_RCVR_TEST	RCVR_TO_CODEC_RCVR_TEST - @single_brd_lib.SINGLE_BRD	9A7 11A7
RCVR_TO_CODEC_RCVR_TEST_L67	RCVR_TO_CODEC_RCVR_TEST_L67 - @single_brd_lib.SINGLE_BRD	9C5
RESET_1V8_L	RESET_1V8_L - @single_brd_lib.SINGLE_BRD	2B7 4D8 13B6 14C6 16C2 19B2 22B4 23D6
	RF_RESET_L - @single_brd_lib.RADIO_MLB(i624_page 23)	44C3 44D8
REVERSE_GATE	REVERSE_GATE - @single_brd_lib.SINGLE_BRD	17A7
SAGE_DUMP_GATE	SAGE_DUMP_GATE - @single_brd_lib.SINGLE_BRD	18C4
SAGE_TO_CUMULUS_IN<0>	SAGE_TO_CUMULUS_IN<0> - @single_brd_lib.SINGLE_BRD	18C1 18C7
SAGE_TO_CUMULUS_IN<1>	SAGE_TO_CUMULUS_IN<1> - @single_brd_lib.SINGLE_BRD	18C1 18C7
SAGE_TO_CUMULUS_IN<2>	SAGE_TO_CUMULUS_IN<2> - @single_brd_lib.SINGLE_BRD	18C1 18C7
SAGE_TO_CUMULUS_IN<3>	SAGE_TO_CUMULUS_IN<3> - @single_brd_lib.SINGLE_BRD	18C7 18D1
SAGE_TO_CUMULUS_IN<4>	SAGE_TO_CUMULUS_IN<4> - @single_brd_lib.SINGLE_BRD	18C7 18D1
SAGE_TO_CUMULUS_IN<5>	SAGE_TO_CUMULUS_IN<5> - @single_brd_lib.SINGLE_BRD	18C7 18D1
SAGE_TO_CUMULUS_IN<6>	SAGE_TO_CUMULUS_IN<6> - @single_brd_lib.SINGLE_BRD	18C1 18C7
SAGE_TO_CUMULUS_IN<7>	SAGE_TO_CUMULUS_IN<7> - @single_brd_lib.SINGLE_BRD	18C1 18C7
SAGE_TO_CUMULUS_IN<8>	SAGE_TO_CUMULUS_IN<8> - @single_brd_lib.SINGLE_BRD	18C1 18C7
SAGE_TO_CUMULUS_IN<9>	SAGE_TO_CUMULUS_IN<9> - @single_brd_lib.SINGLE_BRD	18C1 18C7
SAGE_TO_CUMULUS_IN<10>	SAGE_TO_CUMULUS_IN<10> - @single_brd_lib.SINGLE_BRD	18C1 18C7
SAGE_TO_CUMULUS_IN<11>	SAGE_TO_CUMULUS_IN<11> - @single_brd_lib.SINGLE_BRD	18C1 18C7
SAGE_TO_CUMULUS_IN<12>	SAGE_TO_CUMULUS_IN<12> - @single_brd_lib.SINGLE_BRD	18B7 18C1
SAGE_TO_CUMULUS_IN<13>	SAGE_TO_CUMULUS_IN<13> - @single_brd_lib.SINGLE_BRD	18C1 18C7
SAGE_TO_CUMULUS_IN<14>	SAGE_TO_CUMULUS_IN<14> - @single_brd_lib.SINGLE_BRD	18C1 18C7
SAGE_TO_TOUCH_VCPH_REF	SAGE_TO_TOUCH_VCPH_REF - @single_brd_lib.SINGLE_BRD	18A5 18B4
SAGE_TO_TOUCH_VCPH_REF_CONN	SAGE_TO_TOUCH_VCPH_REF_CONN - @single_brd_lib.SINGLE_BRD	18A6 18A7
SAGE_TO_TOUCH_VCPL_LCM_CONN	SAGE_TO_TOUCH_VCPL_LCM_CONN - @single_brd_lib.SINGLE_BRD	19C6
SAGE_TO_TOUCH_VCPL_REF	SAGE_TO_TOUCH_VCPL_REF - @single_brd_lib.SINGLE_BRD	18A5 18B4
SAGE_TO_TOUCH_VCPL_REF_CONN	SAGE_TO_TOUCH_VCPL_REF_CONN - @single_brd_lib.SINGLE_BRD	18A6 18A7
SAGE_TO_TOUCH_VSTM_OUT<0>	SAGE_TO_TOUCH_VSTM_OUT<0> - @single_brd_lib.SINGLE_BRD	18A7 18A8 18B1
SAGE_TO_TOUCH_VSTM_OUT<1>	SAGE_TO_TOUCH_VSTM_OUT<1> - @single_brd_lib.SINGLE_BRD	18A8 18C1
SAGE_TO_TOUCH_VSTM_OUT<2>	SAGE_TO_TOUCH_VSTM_OUT<2> - @single_brd_lib.SINGLE_BRD	18A8 18B1
SAGE_TO_TOUCH_VSTM_OUT<3>	SAGE_TO_TOUCH_VSTM_OUT<3> - @single_brd_lib.SINGLE_BRD	18A8 18B1
SAGE_TO_TOUCH_VSTM_OUT<4>	SAGE_TO_TOUCH_VSTM_OUT<4> - @single_brd_lib.SINGLE_BRD	18A8 18C1
SAGE_TO_TOUCH_VSTM_OUT<5>	SAGE_TO_TOUCH_VSTM_OUT<5> - @single_brd_lib.SINGLE_BRD	18A8 18C1
SAGE_TO_TOUCH_VSTM_OUT<6>	SAGE_TO_TOUCH_VSTM_OUT<6> - @single_brd_lib.SINGLE_BRD	18A8 18C1
SAGE_TO_TOUCH_VSTM_OUT<7>	SAGE_TO_TOUCH_VSTM_OUT<7> - @single_brd_lib.SINGLE_BRD	18A8 18C1
SAGE_TO_TOUCH_VSTM_OUT<8>	SAGE_TO_TOUCH_VSTM_OUT<8> - @single_brd_lib.SINGLE_BRD	18A8 18C1
SAGE_TO_TOUCH_VSTM_OUT<9>	SAGE_TO_TOUCH_VSTM_OUT<9> - @single_brd_lib.SINGLE_BRD	18A8 18C1
SAGE_TO_TOUCH_VSTM_OUT<10>	SAGE_TO_TOUCH_VSTM_OUT<10> - @single_brd_lib.SINGLE_BRD	18A8 18C1
SAGE_TO_TOUCH_VSTM_OUT<11>	SAGE_TO_TOUCH_VSTM_OUT<11> - @single_brd_lib.SINGLE_BRD	18A7 18B1
SAGE_TO_TOUCH_VSTM_OUT<12>	SAGE_TO_TOUCH_VSTM_OUT<12> - @single_brd_lib.SINGLE_BRD	18A7 18C1
SAGE_TO_TOUCH_VSTM_OUT<13>	SAGE_TO_TOUCH_VSTM_OUT<13> - @single_brd_lib.SINGLE_BRD	18A7 18C1
SAGE_TO_TOUCH_VSTM_OUT<14>	SAGE_TO_TOUCH_VSTM_OUT<14> - @single_brd_lib.SINGLE_BRD	18A7 18C1
SAGE_TO_TOUCH_VSTM_OUT<15>	SAGE_TO_TOUCH_VSTM_OUT<15> - @single_brd_lib.SINGLE_BRD	18A7 18C1
SAGE_TO_TOUCH_VSTM_OUT<16>	SAGE_TO_TOUCH_VSTM_OUT<16> - @single_brd_lib.SINGLE_BRD	18A7 18B1
SAGE_TO_TOUCH_VSTM_OUT<17>	SAGE_TO_TOUCH_VSTM_OUT<17> - @single_brd_lib.SINGLE_BRD	18A7 18B1
SAGE_TO_TOUCH_VSTM_OUT<18>	SAGE_TO_TOUCH_VSTM_OUT<18> - @single_brd_lib.SINGLE_BRD	18A7 18C1
SAGE_TO_TOUCH_VSTM_OUT<19>	SAGE_TO_TOUCH_VSTM_OUT<19> - @single_brd_lib.SINGLE_BRD	18A7 18C1
SAGE_VBIAS	SAGE_VBIAS - @single_brd_lib.SINGLE_BRD	18B3
SAGE_VBIAS_DRAIN	SAGE_VBIAS_DRAIN - @single_brd_lib.SINGLE_BRD	18C5
SPEAKER_TO_SPKAMP_ISENSE_N	SPEAKER_TO_SPKAMP_ISENSE_N - @single_brd_lib.SINGLE_BRD	15C5
SPEAKER_TO_SPKAMP_ISENSE_P	SPEAKER_TO_SPKAMP_ISENSE_P - @single_brd_lib.SINGLE_BRD	15C5
SPEAKER_TO_SPKAMP_VSENSE_N	SPEAKER_TO_SPKAMP_VSENSE_N - @single_brd_lib.SINGLE_BRD	15C2 17A7
SPEAKER_TO_SPKAMP_VSENSE_P	SPEAKER_TO_SPKAMP_VSENSE_P - @single_brd_lib.SINGLE_BRD	15C2 17A7
SPKAMP_IREF	SPKAMP_IREF - @single_brd_lib.SINGLE_BRD	15C5
SPKAMP_TO_AP_INT_L	SPKAMP_TO_AP_INT_L - @single_brd_lib.SINGLE_BRD	3D8 15C6
SPKAMP_TO_SPEAKER_OUT_CONN_N	SPKAMP_TO_SPEAKER_OUT_CONN_N - @single_brd_lib.SINGLE_BRD	15C1 17A7
SPKAMP_TO_SPEAKER_OUT_CONN_P	SPKAMP_TO_SPEAKER_OUT_CONN_P - @single_brd_lib.SINGLE_BRD	15C1 17A7 17C5
SPKAMP_TO_SPEAKER_OUT_N	SPKAMP_TO_SPEAKER_OUT_N - @single_brd_lib.SINGLE_BRD	15C5
SPKAMP_TO_SPEAKER_OUT_P	SPKAMP_TO_SPEAKER_OUT_P - @single_brd_lib.SINGLE_BRD	15C5
SPKR_FLTR_P	SPKR_FLTR_P - @single_brd_lib.SINGLE_BRD	15C3
SPKR_SNS_N	SPKR_SNS_N - @single_brd_lib.SINGLE_BRD	15C3
SPKR_SNS_P	SPKR_SNS_P - @single_brd_lib.SINGLE_BRD	15C3
TOUCH_TO_AP_INT_L	TOUCH_TO_AP_INT_L - @single_brd_lib.SINGLE_BRD	3C8 18B8
TOUCH_TO_AP_SPI1_MISO	TOUCH_TO_AP_SPI1_MISO - @single_brd_lib.SINGLE_BRD	3B4 18B8
TOUCH_TO_AP_SPI1_MISO_R	TOUCH_TO_AP_SPI1_MISO_R - @single_brd_lib.SINGLE_BRD	18B7
TOUCH_TO_SAGE_SENSE_	TOUCH_TO_SAGE_SENSE_IN<0> -	18A8 18C3

IN<0>	@single_brd_lib.SINGLE_BRD	
TOUCH_TO_SAGE_SENSE_IN<1>	@single_brd_lib.SINGLE_BRD	18A8 18C3
TOUCH_TO_SAGE_SENSE_IN<2>	@single_brd_lib.SINGLE_BRD	18A8 18C3
TOUCH_TO_SAGE_SENSE_IN<3>	@single_brd_lib.SINGLE_BRD	18A8 18D3
TOUCH_TO_SAGE_SENSE_IN<4>	@single_brd_lib.SINGLE_BRD	18A8 18D3
TOUCH_TO_SAGE_SENSE_IN<5>	@single_brd_lib.SINGLE_BRD	18A8 18D3
TOUCH_TO_SAGE_SENSE_IN<6>	@single_brd_lib.SINGLE_BRD	18A7 18C3
TOUCH_TO_SAGE_SENSE_IN<7>	@single_brd_lib.SINGLE_BRD	18A7 18C3
TOUCH_TO_SAGE_SENSE_IN<8>	@single_brd_lib.SINGLE_BRD	18A7 18C3
TOUCH_TO_SAGE_SENSE_IN<9>	@single_brd_lib.SINGLE_BRD	18A7 18C3
TOUCH_TO_SAGE_SENSE_IN<10>	@single_brd_lib.SINGLE_BRD	18A8 18C3
TOUCH_TO_SAGE_SENSE_IN<11>	@single_brd_lib.SINGLE_BRD	18A8 18C3
TOUCH_TO_SAGE_SENSE_IN<12>	@single_brd_lib.SINGLE_BRD	18A7 18C3
TOUCH_TO_SAGE_SENSE_IN<13>	@single_brd_lib.SINGLE_BRD	18A7 18C3
TOUCH_TO_SAGE_SENSE_IN<14>	@single_brd_lib.SINGLE_BRD	18A7 18C3
TOUCH_TO_SAGE_VCM_IN	TOUCH_TO_SAGE_VCM_IN - @single_brd_lib.SINGLE_BRD	18A5 18B1
TOUCH_TO_SAGE_VCM_IN_CONN	TOUCH_TO_SAGE_VCM_IN_CONN - @single_brd_lib.SINGLE_BRD	18A6 18A7
TRISTAR_BI_AP_JTAG_SWDIO	TRISTAR_BI_AP_JTAG_SWDIO - @single_brd_lib.SINGLE_BRD	2B6 16C4
TRISTAR_BYPASS	TRISTAR_BYPASS - @single_brd_lib.SINGLE_BRD	16C3
TRISTAR_TO_AP_ACC_UART6_RXD	TRISTAR_TO_AP_ACC_UART6_RXD - @single_brd_lib.SINGLE_BRD	3B5 16C4
TRISTAR_TO_AP_DEBUG_UART0_RXD	TRISTAR_TO_AP_DEBUG_UART0_RXD - @single_brd_lib.SINGLE_BRD	3C5 16C4
TRISTAR_TO_AP_INT	TRISTAR_TO_AP_INT - @single_brd_lib.SINGLE_BRD	3C5 13B4 16C2
TRISTAR_TO_AP_JTAG_SWCLK	TRISTAR_TO_AP_JTAG_SWCLK - @single_brd_lib.SINGLE_BRD	2B6 16C4
TRISTAR_TO_PMU_HOST_RESET	TRISTAR_TO_PMU_HOST_RESET - @single_brd_lib.SINGLE_BRD	13B6 16C1
TRISTAR_TO_PMU_MIKEYBUS_TEST_NEG	TRISTAR_TO_PMU_MIKEYBUS_TEST_NEG - @single_brd_lib.SINGLE_BRD	13C6 16C6
TRISTAR_TO_PMU_MIKEYBUS_TEST_POS	TRISTAR_TO_PMU_MIKEYBUS_TEST_POS - @single_brd_lib.SINGLE_BRD	13C6 16D6
TRISTAR_TO_PMU_OVP_SW_EN_L	TRISTAR_TO_PMU_OVP_SW_EN_L - @single_brd_lib.SINGLE_BRD	12D7 16C1
TRISTAR_TO_PMU_USB_BRICKID	TRISTAR_TO_PMU_USB_BRICKID - @single_brd_lib.SINGLE_BRD	13C2 16C4
TRISTAR_TO_PMU_USB_BRICKID_R	TRISTAR_TO_PMU_USB_BRICKID_R - @single_brd_lib.SINGLE_BRD	13C4 13C6
U12_GPIO_3	U12_GPIO_3 - @single_brd_lib.SINGLE_BRD	18B6
USB_CONN_SNUB	USB_CONN_SNUB - @single_brd_lib.SINGLE_BRD	17A6
USB_REXT	USB_REXT - @single_brd_lib.SINGLE_BRD	2B4
USB_VBUS_DETECT	USB_VBUS_DETECT - @single_brd_lib.SINGLE_BRD	2B3 12D8
WLAN_TO_AP_HSIC2_RDY	WLAN_TO_AP_HSIC2_RDY - @single_brd_lib.SINGLE_BRD	3C2 23B6
	WLAN_HSIC3_DEVICE_RDY - @single_brd_lib.RADIO_MLB(i624_page23)	44C6 44C8 65B3
WLAN_TO_AP_HSIC2_REMOTE_WAKE	WLAN_TO_AP_HSIC2_REMOTE_WAKE - @single_brd_lib.SINGLE_BRD	3C2 23B6
	WLAN_HSIC3_RESUME - @single_brd_lib.RADIO_MLB(i624_page23)	44C6 44D8 65B3
WLAN_TO_AP_UART3_RXD	WLAN_TO_AP_UART3_RXD - @single_brd_lib.SINGLE_BRD	3C5 23C6
	WLAN_UART_TXD - @single_brd_lib.RADIO_MLB(i624_page23)	44C8 65B3
WLAN_TO_PMU_HOST_WAKE	WLAN_TO_PMU_HOST_WAKE - @single_brd_lib.SINGLE_BRD	13B4 23C6
	HOST_WAKE_WLAN - @single_brd_lib.RADIO_MLB(i624_page23)	44C8 65B3

Base nets and synonyms for single_brd_lib.RADIO_MLB(@single_brd_lib.single_brd(sch_1):page23_i624@radio_mlb_lib.radio_mlb(sch_1))

Base Signal	Synonyms	Location([Zone][dir])
3P4T_SEL_0	3P4T_SEL_0 - @single_brd_lib.RADIO_MLB	48C2 53C1 53D4
3P4T_SEL_1	3P4T_SEL_1 - @single_brd_lib.RADIO_MLB	48C2 53B1 53D4 59C3
19P2M_CLK_EN	19P2M_CLK_EN - @single_brd_lib.RADIO_MLB	46B2 47A5
19P2M_MDM	19P2M_MDM - @single_brd_lib.RADIO_MLB	46B2 47A5
19P2M_WTR	19P2M_WTR - @single_brd_lib.RADIO_MLB	46B2 49C5
19P2M_WTR_FILT_IN	19P2M_WTR_FILT_IN - @single_brd_lib.RADIO_MLB	49C5
19P2M_WTR_IN	19P2M_WTR_IN - @single_brd_lib.RADIO_MLB	49C4
19P2M_XTAL_IN	19P2M_XTAL_IN - @single_brd_lib.RADIO_MLB	46B4
19P2M_XTAL_OUT	19P2M_XTAL_OUT - @single_brd_lib.RADIO_MLB	46B4
50_ASM_ANT	50_ASM_ANT - @single_brd_lib.RADIO_MLB	59B4
50_ASM_ANT_MCH	50_ASM_ANT_MCH - @single_brd_lib.RADIO_MLB	59B4
50_B1_ANT	50_B1_ANT - @single_brd_lib.RADIO_MLB	53A1 59B7
50_B1_B3_TX_SAW_IN	50_B1_B3_TX_SAW_IN - @single_brd_lib.RADIO_MLB	52C4
50_B1_PA_IN	50_B1_PA_IN - @single_brd_lib.RADIO_MLB	53C7
50_B1_PA_OUT	50_B1_PA_OUT - @single_brd_lib.RADIO_MLB	53B6
50_B1_PA_OUT_MATCH	50_B1_PA_OUT_MATCH - @single_brd_lib.RADIO_MLB	53B4
50_B1_RX_MOD_ANT	50_B1_RX_MOD_ANT -	53A3
50_B1_TX_SAW_MATCH	@single_brd_lib.RADIO_MLB 50_B1_TX_SAW_MATCH - @single_brd_lib.RADIO_MLB	52D2
50_B1_TX_SAW_OUT	50_B1_TX_SAW_OUT - @single_brd_lib.RADIO_MLB	52D1 53C8
50_B2_ANT	50_B2_ANT - @single_brd_lib.RADIO_MLB	54C2 59B7
50_B2_B3_CPL_IN	50_B2_B3_CPL_IN - @single_brd_lib.RADIO_MLB	54C3 55C2
50_B2_DPLX_ANT	50_B2_DPLX_ANT - @single_brd_lib.RADIO_MLB	54C4
50_B2_DPLX_ANT_MATCH	50_B2_DPLX_ANT_MATCH - @single_brd_lib.RADIO_MLB	54C3
50_B2_DUPLX_RX	50_B2_DUPLX_RX - @single_brd_lib.RADIO_MLB	51C7 54C5
50_B2_RX_BALUN	50_B2_RX_BALUN - @single_brd_lib.RADIO_MLB	51C7
50_B2_TX_PAD_IN	50_B2_TX_PAD_IN - @single_brd_lib.RADIO_MLB	54C6
50_B2_TX_SAW_IN	50_B2_TX_SAW_IN - @single_brd_lib.RADIO_MLB	52D7
50_B2_TX_SAW_OUT	50_B2_TX_SAW_OUT - @single_brd_lib.RADIO_MLB	52D5 54C7
50_B3_ANT	50_B3_ANT - @single_brd_lib.RADIO_MLB	54C2 59B7
50_B3_DPLX_ANT	50_B3_DPLX_ANT - @single_brd_lib.RADIO_MLB	54C4
50_B3_DPLX_ANT_MATCH	50_B3_DPLX_ANT_MATCH - @single_brd_lib.RADIO_MLB	54C3
50_B3_DUPLX_RX	50_B3_DUPLX_RX - @single_brd_lib.RADIO_MLB	51C7 54C5
50_B3_RX_BALUN	50_B3_RX_BALUN - @single_brd_lib.RADIO_MLB	51B7
50_B3_TX_PAD_IN	50_B3_TX_PAD_IN - @single_brd_lib.RADIO_MLB	54C6
50_B3_TX_SAW_MATCH	50_B3_TX_SAW_MATCH - @single_brd_lib.RADIO_MLB	52C2
50_B3_TX_SAW_OUT	50_B3_TX_SAW_OUT - @single_brd_lib.RADIO_MLB	52C1 54C7
50_B5_ANT	50_B5_ANT - @single_brd_lib.RADIO_MLB	56C2 59B7
50_B5_B8_CPL_IN	50_B5_B8_CPL_IN - @single_brd_lib.RADIO_MLB	53C4 56D3
50_B5_B18_TX_SAW_IN	50_B5_B18_TX_SAW_IN - @single_brd_lib.RADIO_MLB	52D7
50_B5_DPLX_ANT	50_B5_DPLX_ANT - @single_brd_lib.RADIO_MLB	56C3
50_B5_TX_PAD_IN	50_B5_TX_PAD_IN - @single_brd_lib.RADIO_MLB	56C6
50_B5_TX_SAW_OUT	50_B5_TX_SAW_OUT - @single_brd_lib.RADIO_MLB	52D5 56C7
50_B7_ANT	50_B7_ANT - @single_brd_lib.RADIO_MLB	55B2 59B7
50_B7_B38_B40_PRX_BALUN_IN	50_B7_B38_B40_PRX_BALUN_IN - @single_brd_lib.RADIO_MLB	51C5 53D1
50_B7_B38_B40_SPDT	50_B7_B38_B40_SPDT - @single_brd_lib.RADIO_MLB	62C3
50_B7_DPLX_ANT	50_B7_DPLX_ANT - @single_brd_lib.RADIO_MLB	55B3
50_B7_DUPLX_RX	50_B7_DUPLX_RX - @single_brd_lib.RADIO_MLB	53D1 55B4
50_B7_RX_SP3T_IN	50_B7_RX_SP3T_IN - @single_brd_lib.RADIO_MLB	53D2
50_B7_TX_FILT_IN	50_B7_TX_FILT_IN - @single_brd_lib.RADIO_MLB	52B4 55C8
50_B7_TX_FILT_MATCH	50_B7_TX_FILT_MATCH - @single_brd_lib.RADIO_MLB	55C7
50_B7_TX_FILT_OUT	50_B7_TX_FILT_OUT - @single_brd_lib.RADIO_MLB	55C6
50_B7_TX_PAD_IN	50_B7_TX_PAD_IN - @single_brd_lib.RADIO_MLB	55C5
50_B7_TX_SPDT_OUT	50_B7_TX_SPDT_OUT - @single_brd_lib.RADIO_MLB	52B5
50_B8_ANT	50_B8_ANT - @single_brd_lib.RADIO_MLB	56C2 59B7
50_B8_DPLX_ANT	50_B8_DPLX_ANT - @single_brd_lib.RADIO_MLB	56C3
50_B8_TX_PAD_IN	50_B8_TX_PAD_IN - @single_brd_lib.RADIO_MLB	56C6
50_B8_TX_SAW_IN	50_B8_TX_SAW_IN - @single_brd_lib.RADIO_MLB	52C7
50_B8_TX_SAW_OUT	50_B8_TX_SAW_OUT - @single_brd_lib.RADIO_MLB	52C5 56C7
50_B20_ANT	50_B20_ANT - @single_brd_lib.RADIO_MLB	55C1 59B7
50_B20_DPLX_ANT	50_B20_DPLX_ANT - @single_brd_lib.RADIO_MLB	55C3
50_B20_TX_PAD_IN	50_B20_TX_PAD_IN - @single_brd_lib.RADIO_MLB	55C5
50_B20_TX_SAW_IN	50_B20_TX_SAW_IN - @single_brd_lib.RADIO_MLB	52C5 55C8
50_B20_TX_SAW_MATCH	50_B20_TX_SAW_MATCH - @single_brd_lib.RADIO_MLB	55C8
50_B20_TX_SAW_OUT	50_B20_TX_SAW_OUT - @single_brd_lib.RADIO_MLB	55C6
50_B34_B39_PA_FILT_IN	50_B34_B39_PA_FILT_IN - @single_brd_lib.RADIO_MLB	53C4
50_B34_B39_PA_FILT_OUT	50_B34_B39_PA_FILT_OUT - @single_brd_lib.RADIO_MLB	53C3
50_B34_B39_PA_OUT	50_B34_B39_PA_OUT - @single_brd_lib.RADIO_MLB	53C4
50_B34_B39_RX_ASM	50_B34_B39_RX_ASM - @single_brd_lib.RADIO_MLB	53B1 59B7
50_B34_B39_TX_ASM	50_B34_B39_TX_ASM - @single_brd_lib.RADIO_MLB	53C1 59B7
50_B34_B39_TX_FILT_IN	50_B34_B39_TX_FILT_IN - @single_brd_lib.RADIO_MLB	52D4
50_B34_PA_IN	50_B34_PA_IN - @single_brd_lib.RADIO_MLB	53C7
50_B34_TX_SAW_OUT	50_B34_TX_SAW_OUT - @single_brd_lib.RADIO_MLB	52D1 53C8
50_B38_B40_DRX_AUX2_OUT	50_B38_B40_DRX_AUX2_OUT - @single_brd_lib.RADIO_MLB	60A7
50_B38_B40_DRX_FILT_IN	50_B38_B40_DRX_FILT_IN - @single_brd_lib.RADIO_MLB	60A6
50_B38_B40_PA_IN	50_B38_B40_PA_IN - @single_brd_lib.RADIO_MLB	53B7
50_B38_B40_SPDT	50_B38_B40_SPDT - @single_brd_lib.RADIO_MLB	51B2 59C2
50_B38_B40_TX_FILT_ANT	50_B38_B40_TX_FILT_ANT - @single_brd_lib.RADIO_MLB	51B3
50_B38_B40_TX_MATCH	50_B38_B40_TX_MATCH - @single_brd_lib.RADIO_MLB	53B7
50_B38_B40_TX_SPDT_MATCH	50_B38_B40_TX_SPDT_MATCH -	52B4 53B8
ATCH	@single_brd_lib.RADIO_MLB	
50_B38_B40_TX_SPDT_OUT	50_B38_B40_TX_SPDT_OUT - @single_brd_lib.RADIO_MLB	52B5
50_B38_DRX_FILT_OUT	50_B38_DRX_FILT_OUT - @single_brd_lib.RADIO_MLB	60A5
50_B38_DRX_MOD_IN	50_B38_DRX_MOD_IN - @single_brd_lib.RADIO_MLB	60B4
50_B38_FILTER	50_B38_FILTER - @single_brd_lib.RADIO_MLB	51B5 53D1
50_B38_FILTER_MATCH	50_B38_FILTER_MATCH - @single_brd_lib.RADIO_MLB	51B4
50_B38_PA_MATCH	50_B38_PA_MATCH - @single_brd_lib.RADIO_MLB	53D4
50_B38_PA_OUT	50_B38_PA_OUT - @single_brd_lib.RADIO_MLB	53D4
50_B39_PA_IN	50_B39_PA_IN - @single_brd_lib.RADIO_MLB	53C7
50_B39_TX_SAW_OUT	50_B39_TX_SAW_OUT - @single_brd_lib.RADIO_MLB	52D1 53C8
50_B40_DRX_FILT_OUT	50_B40_DRX_FILT_OUT - @single_brd_lib.RADIO_MLB	60A5
50_B40_DRX_MOD_IN	50_B40_DRX_MOD_IN - @single_brd_lib.RADIO_MLB	60A4
50_B40_FILTER	50_B40_FILTER - @single_brd_lib.RADIO_MLB	51A5 53D1
50_B40_FILTER_MATCH	50_B40_FILTER_MATCH - @single_brd_lib.RADIO_MLB	51A4
50_B40_PA_MATCH	50_B40_PA_MATCH - @single_brd_lib.RADIO_MLB	53C4
50_B40_PA_OUT	50_B40_PA_OUT - @single_brd_lib.RADIO_MLB	53C4
50_DCS_RX_ASM	50_DCS_RX_ASM - @single_brd_lib.RADIO_MLB	53B1 59B7
50_DIVERSITY_SWITCH_MATCH	50_DIVERSITY_SWITCH_MATCH - @single_brd_lib.RADIO_MLB	60C4
50_DRX_ANT	50_DRX_ANT - @single_brd_lib.RADIO_MLB	59B4 60D6
50_DRX_ASM_MCH	50_DRX_ASM_MCH - @single_brd_lib.RADIO_MLB	60D6
50_DRX_MOD_TERM	50_DRX_MOD_TERM - @single_brd_lib.RADIO_MLB	60C3
50_EXTRACTOR_CELL	50_EXTRACTOR_CELL - @single_brd_lib.RADIO_MLB	62C3
50_EXTRACTOR_DIPLEX_1	50_EXTRACTOR_DIPLEX_1 - @single_brd_lib.RADIO_MLB	62B5
50_EXTRACTOR_WIFI	50_EXTRACTOR_WIFI - @single_brd_lib.RADIO_MLB	62C4
50_FULL_B40_FILTER	50_FULL_B40_FILTER - @single_brd_lib.RADIO_MLB	51A5 53D1
50_FULL_B40_FILTER_MATCH	50_FULL_B40_FILTER_MATCH - @single_brd_lib.RADIO_MLB	51A4
50_FULL_B40_SPDT	50_FULL_B40_SPDT - @single_brd_lib.RADIO_MLB	51A2 59C2
50_FULL_B40_SPDT_MATCH	50_FULL_B40_SPDT_MATCH - @single_brd_lib.RADIO_MLB	51A3
50_GPS_ANT	50_GPS_ANT - @single_brd_lib.RADIO_MLB	61B7
50_GPS_ANT_CONN	50_GPS_ANT_CONN - @single_brd_lib.RADIO_MLB	61B6
50_GPS_ANT_FEED	50_GPS_ANT_FEED - @single_brd_lib.RADIO_MLB	61B5
50_GPS_DRX_MOD_IN	50_GPS_DRX_MOD_IN - @single_brd_lib.RADIO_MLB	60C4
50_GPS_LNA_OUT	50_GPS_LNA_OUT - @single_brd_lib.RADIO_MLB	60B6 61B3
50_HSIC_BB_DATA	50_AP_BI_BB_HSIC1_DATA - @single_brd_lib.SINGLE_BRD	2B6 23B6
	50_HSIC_BB_DATA - @single_brd_lib.RADIO_MLB	44B1 44B6 44C8 47B3
50_HSIC_BB_STROBE	50_AP_BI_BB_HSIC1_STB - @single_brd_lib.SINGLE_BRD	2B6 23B6
	50_HSIC_BB_STROBE - @single_brd_lib.RADIO_MLB	44B1 44B6 44C8 47B3
50_HSIC_CAL	50_HSIC_CAL - @single_brd_lib.RADIO_MLB	47B3
50_HSIC_WLAN_DATA	50_AP_BI_WLAN_HSIC2_DATA - @single_brd_lib.SINGLE_BRD	2B6 23B6
	50_HSIC_WLAN_DATA - @single_brd_lib.RADIO_MLB	44B6 44C8 65B6
50_HSIC_WLAN_STROBE	50_AP_BI_WLAN_HSIC2_STB - @single_brd_lib.SINGLE_BRD	2B6 23B6
	50_HSIC_WLAN_STROBE - @single_brd_lib.RADIO_MLB	44B6 44C8 65B6
50_LAT_COAX	50_LAT_COAX - @single_brd_lib.RADIO_MLB	62A6
50_LAT_MATCH	50_LAT_MATCH - @single_brd_lib.RADIO_MLB	62A5
50_LAT_TEST	50_LAT_TEST - @single_brd_lib.RADIO_MLB	59B3 62A3
50_MBPA_CPL_IN	50_MBPA_CPL_IN - @single_brd_lib.RADIO_MLB	53C4 54C3
50_NTCH_FILT_OUT	50_NTCH_FILT_OUT - @single_brd_lib.RADIO_MLB	62D7
50_PA_ISO	50_PA_ISO - @single_brd_lib.RADIO_MLB	55C3
50_PDET_IN	50_PDET_IN - @single_brd_lib.RADIO_MLB	49C3
50_PDET_PAD_IN	50_PDET_PAD_IN - @single_brd_lib.RADIO_MLB	49C1 56C3
50_PDET_PAD_OUT	50_PDET_PAD_OUT - @single_brd_lib.RADIO_MLB	49C2
50_RX_MOD_B34_B39_IN	50_RX_MOD_B34_B39_IN - @single_brd_lib.RADIO_MLB	53B2
50_RX_MOD_DCS_IN	50_RX_MOD_DCS_IN - @single_brd_lib.RADIO_MLB	53B2
50_TXRX_B38_B40_ASM	50_TXRX_B38_B40_ASM - @single_brd_lib.RADIO_MLB	59B5
50_TXRX_B38_B40_SPDT	50_TXRX_B38_B40_SPDT - @single_brd_lib.RADIO_MLB	59C3
50_TX_G_HB_ASM	50_TX_G_HB_ASM - @single_brd_lib.RADIO_MLB	57B2 59B4
50_TX_G_HB_MCH	50_TX_G_HB_MCH - @single_brd_lib.RADIO_MLB	57C7
50_TX_G_HB_PAIN	50_TX_G_HB_PAIN - @single_brd_lib.RADIO_MLB	57C6
50_TX_G_HB_PAOUT	50_TX_G_HB_PAOUT - @single_brd_lib.RADIO_MLB	57B4
50_TX_G_LB_ASM	50_TX_G_LB_ASM - @single_brd_lib.RADIO_MLB	57B2 59B4
50_TX_G_LB_MCH	50_TX_G_LB_MCH - @single_brd_lib.RADIO_MLB	57B7
50_TX_G_LB_PAIN	50_TX_G_LB_PAIN - @single_brd_lib.RADIO_MLB	57B6
50_TX_G_LB_PAOUT	50_TX_G_LB_PAOUT - @single_brd_lib.RADIO_MLB	57B4
50_UAT1_LPF	50_UAT1_LPF - @single_brd_lib.RADIO_MLB	62D3
50_UAT2_ANT_FD	50_UAT2_ANT_FD - @single_brd_lib.RADIO_MLB	62B8
50_UAT2_ANT_MATCH	50_UAT2_ANT_MATCH - @single_brd_lib.RADIO_MLB	62B7
50_UAT2_ANT_MATCH_T	50_UAT2_ANT_MATCH_T - @single_brd_lib.RADIO_MLB	62B7
50_UAT2_DIPLEX	50_UAT2_DIPLEX - @single_brd_lib.RADIO_MLB	62C6
50_UAT2_LPF	50_UAT2_LPF - @single_brd_lib.RADIO_MLB	62C5
50_UAT_CELL	50_UAT_CELL - @single_brd_lib.RADIO_MLB	62D4
50_UAT_COAX_DOWN	50_UAT_COAX_DOWN - @single_brd_lib.RADIO_MLB	62C2
50_UAT_COAX_UP	50_UAT_COAX_UP - @single_brd_lib.RADIO_MLB	59B4 62C1
50_UAT_TEST	50_UAT_TEST - @single_brd_lib.RADIO_MLB	62D3
50_UPPER_ANT_FEED	50_UPPER_ANT_FEED - @single_brd_lib.RADIO_MLB	62D8
50_UPPER_MCH_1	50_UPPER_MCH_1 - @single_brd_lib.RADIO_MLB	62D6
50_WLAN_A	50_WLAN_A - @single_brd_lib.RADIO_MLB	62C6 65C1
50_WLAN_A_ANT	50_WLAN_A_ANT - @single_brd_lib.RADIO_MLB	65C4
50_WLAN_G	50_WLAN_G - @single_brd_lib.RADIO_MLB	62C4 65C1
50_WLAN_G_ANT	50_WLAN_G_ANT - @single_brd_lib.RADIO_MLB	65C4
50_XCVR_2G_HB_TX	50_XCVR_2G_HB_TX - @single_brd_lib.RADIO_MLB	49D2 57C8
50_XCVR_2G_LB_TX	50_XCVR_2G_LB_TX - @single_brd_lib.RADIO_MLB	49D2 57B8
50_XCVR_B1_B3_TX	50_XCVR_B1_B3_TX - @single_brd_lib.RADIO_MLB	49D2 52C5
50_XCVR_B2_TX	50_XCVR_B2_TX - @single_brd_lib.RADIO_MLB	49D2 52D8
50_XCVR_B5_B18_TX	50_XCVR_B5_B18_TX - @single_brd_lib.RADIO_MLB	49D2 52D8
50_XCVR_B7_B38_B40_TX	50_XCVR_B7_B38_B40_TX - @single_brd_lib.RADIO_MLB	49C2 52B7
50_XCVR_B7_B38_B40_TX_MATCH	50_XCVR_B7_B38_B40_TX_MATCH - @single_brd_lib.RADIO_MLB	52B6
50_XCVR_B8_TX	50_XCVR_B8_TX - @single_brd_lib.RADIO_MLB	49D2 52C8
50_XCVR_B20_TX	50_XCVR_B20_TX - @single_brd_lib.RADIO_MLB	49D2 52C8
50_XCVR_B34_B39_TX	50_XCVR_B34_B39_TX - @single_brd_lib.RADIO_MLB	49D2 52D5
90_BB_USB_D_N	90_TRISTAR_BI_BB_USB_N - @single_brd_lib.SINGLE_BRD	16C4 23C6
	90_BB_USB_D_N - @single_brd_lib.RADIO_MLB	44C3 44C8 47A5
90_BB_USB_D_P	90_TRISTAR_BI_BB_USB_P - @single_brd_lib.SINGLE_BRD	16D4 23C6
	90_BB_USB_D_P - @single_brd_lib.RADIO_MLB	44C3 44C8 47A5
100_B5_DUPLX_RX_N	100_B5_DUPLX_RX_N - @single_brd_lib.RADIO_MLB	51C4 56C5
100_B5_DUPLX_RX_P	100_B5_DUPLX_RX_P - @single_brd_lib.RADIO_MLB	51C4 56C5
100_B7_B38_B40_PRX_BALUN_OUT_N	100_B7_B38_B40_PRX_BALUN_OUT_N - @single_brd_lib.RADIO_MLB	51C4
100_B7_B38_B40_PRX_BALUN_OUT_P	100_B7_B38_B40_PRX_BALUN_OUT_P - @single_brd_lib.RADIO_MLB	51B4
100_B7_B38_B40_PRX_MATCH_N	100_B7_B38_B40_PRX_MATCH_N - @single_brd_lib.RADIO_MLB	51C3
100_B7_B38_B40_PRX_MATCH_P	100_B7_B38_B40_PRX_MATCH_P - @single_brd_lib.RADIO_MLB	51B3
100_B8_DUPLX_RX_N	100_B8_DUPLX_RX_N - @single_brd_lib.RADIO_MLB	51D4 56C5
100_B8_DUPLX_RX_P	100_B8_DUPLX_RX_P - @single_brd_lib.RADIO_MLB	51D4 56C5
100_B20_DUPLX_RX_N	100_B20_DUPLX_RX_N - @single_brd_lib.RADIO_MLB	51B7 55B4
100_B20_DUPLX_RX_P	100_B20_DUPLX_RX_P - @single_brd_lib.RADIO_MLB	51A7 55B4
100_RX_MODULE_OUT_N	100_RX_MODULE_OUT_N - @single_brd_lib.RADIO_MLB	51D7 53B5
100_RX_MODULE_OUT_P	100_RX_MODULE_OUT_P - @single_brd_lib.RADIO_MLB	51D7 53B5
100_XCVR_B1_B2_B3_B34_B39_DRX_N	100_XCVR_B1_B2_B3_B34_B39_DRX_N - @single_brd_lib.RADIO_MLB	49C8 60C2
100_XCVR_B1_B2_B3_B34_B39_DRX_P	100_XCVR_B1_B2_B3_B34_B39_DRX_P - @single_brd_lib.RADIO_MLB	49C8 60C2
100_XCVR_B1_B34_B39_DCS_PRX_N	100_XCVR_B1_B34_B39_DCS_PRX_N - @single_brd_lib.RADIO_MLB	49C8 51D5
100_XCVR_B1_B34_B39_DCS_PRX_P	100_XCVR_B1_B34_B39_DCS_PRX_P - @single_brd_lib.RADIO_MLB	49C8 51D5
100_XCVR_B2_PRX_N	100_XCVR_B2_PRX_N - @single_brd_lib.RADIO_MLB	49C8 51C5
100_XCVR_B2_PRX_P	100_XCVR_B2_PRX_P - @single_brd_lib.RADIO_MLB	49D8 51C5
100_XCVR_B3_PRX_N	100_XCVR_B3_PRX_N - @single_brd_lib.RADIO_MLB	49C8 51C5
100_XCVR_B3_PRX_P	100_XCVR_B3_PRX_P - @single_brd_lib.RADIO_MLB	49C8 51B5
100_XCVR_B5_B18_DRX_N	100_XCVR_B5_B18_DRX_N - @single_brd_lib.RADIO_MLB	49C8 60C2
100_XCVR_B5_B18_DRX_P	100_XCVR_B5_B18_DRX_P - @single_brd_lib.RADIO_MLB	49C8 60C2
100_XCVR_B5_B18_PRX_N	100_XCVR_B5_B18_PRX_N - @single_brd_lib.RADIO_MLB	49D8 51C3
100_XCVR_B5_B18_PRX_P	100_XCVR_B5_B18_PRX_P - @single_brd_lib.RADIO_MLB	49D8 51C3
100_XCVR_B7_B38_B40_DRX_N	100_XCVR_B7_B38_B40_DRX_N - @single_brd_lib.RADIO_MLB	49C8 60C2
100_XCVR_B7_B38_B40_DRX_P	100_XCVR_B7_B38_B40_DRX_P - @single_brd_lib.RADIO_MLB	49C8 60C2
100_XCVR_B7_B38_B40_PRX_N	100_XCVR_B7_B38_B40_PRX_N - @single_brd_lib.RADIO_MLB	49C8 51C2
100_XCVR_B7_B38_B40_PRX_P	100_XCVR_B7_B38_B40_PRX_P - @single_brd_lib.RADIO_MLB	49C8 51B2
100_XCVR_B8_B20_DRX_N	100_XCVR_B8_B20_DRX_N - @single_brd_lib.RADIO_MLB	49C8 60C2
100_XCVR_B8_B20_DRX_P	100_XCVR_B8_B20_DRX_P - @single_brd_lib.RADIO_MLB	49C8 60C2
100_XCVR_B8_PRX_N	100_XCVR_B8_PRX_N - @single_brd_lib.RADIO_MLB	49D8 51D3
100_XCVR_B8_PRX_P	100_XCVR_B8_PRX_P -	49D8 51D3

	@single_brd_lib.RADIO_MLB	
100_XCVR_B20_PRX_N	100_XCVR_B20_PRX_N -	49D8 51B5
	@single_brd_lib.RADIO_MLB	
100_XCVR_B20_PRX_P	100_XCVR_B20_PRX_P -	49D8 51A5
	@single_brd_lib.RADIO_MLB	
100_XCVR_GPS_RX_MATCH_N	100_XCVR_GPS_RX_MATCH_N -	60C4
	@single_brd_lib.RADIO_MLB	
100_XCVR_GPS_RX_MATCH_P	100_XCVR_GPS_RX_MATCH_P -	60C4
	@single_brd_lib.RADIO_MLB	
100_XCVR_GPS_RX_N	100_XCVR_GPS_RX_N -	49B8 60C6
	@single_brd_lib.RADIO_MLB	
100_XCVR_GPS_RX_P	100_XCVR_GPS_RX_P -	49B8 60B6
	@single_brd_lib.RADIO_MLB	
ADC_LDO6_RUIM_1V8	RADIO_TO_PMU_ADC_LDO6_RUIM_1V8 -	13C6 23C6
	@single_brd_lib.SINGLE_BRD	
	ADC_LDO6_RUIM_1V8 -	44A7 44B8
	@single_brd_lib.RADIO_MLB	
ADC_LVS1	RADIO_TO_PMU_ADC_LVS1 -	13C6 23C6
	@single_brd_lib.SINGLE_BRD	
	ADC_LVS1 -	44A7 44A8
	@single_brd_lib.RADIO_MLB	
ADC_SMPS1_MSMC_1V05	RADIO_TO_PMU_ADC_SMPS1_MSMC_1V05 -	13C6 23C6
	@single_brd_lib.SINGLE_BRD	
	ADC_SMPS1_MSMC_1V05 -	44A7 44B8
	@single_brd_lib.RADIO_MLB	
ADC_SMPS3_MSME_1V8	RADIO_TO_PMU_ADC_SMPS3_MSME_1V8 -	13C6 23C6
	@single_brd_lib.SINGLE_BRD	
	ADC_SMPS3_MSME_1V8 -	44A7 44B8
	@single_brd_lib.RADIO_MLB	
ANT_SEL_0	ANT_SEL_0 -	48C2 53D4 59B3 60C6
	@single_brd_lib.RADIO_MLB	
ANT_SEL_1	ANT_SEL_1 -	44C3 48C2 53D4 59B3 60C6
	@single_brd_lib.RADIO_MLB	
ANT_SEL_2	ANT_SEL_2 -	44C1 48C2 59B3 60C6
	@single_brd_lib.RADIO_MLB	
ANT_SEL_3	ANT_SEL_3 -	48C2 59B3 60C6
	@single_brd_lib.RADIO_MLB	
ANT_SEL_4	ANT_SEL_4 -	48C2 59B3
	@single_brd_lib.RADIO_MLB	
AP_HSIC1_RDY	AP_TO_BB_HSIC1_RDY -	3C2 23B6
	@single_brd_lib.SINGLE_BRD	
	AP_HSIC1_RDY -	44C1 44C8 48B2
	@single_brd_lib.RADIO_MLB	
AP_HSIC3_RDY	AP_TO_WLAN_HSIC2_RDY -	3C2 23B6
	@single_brd_lib.SINGLE_BRD	
	AP_HSIC3_RDY -	44C6 44C8 65B3
	@single_brd_lib.RADIO_MLB	
AP_WAKE_MODEM	AP_TO_BB_WAKE_MODEM -	3C8 23B6
	@single_brd_lib.SINGLE_BRD	
	AP_WAKE_MODEM -	44D8 48B4
	@single_brd_lib.RADIO_MLB	
BB_ERROR_FLAG	BB_ERROR_FLAG -	44D6 48B2
	@single_brd_lib.RADIO_MLB	
BB_HSIC1_REMOTE_WAKE	BB_TO_AP_HSIC1_REMOTE_WAKE -	3C2 23B6
	@single_brd_lib.SINGLE_BRD	
	BB_HSIC1_REMOTE_WAKE -	44C8 48B2
	@single_brd_lib.RADIO_MLB	
BB_I2S2_CLK	BB_I2S2_CLK -	44A8 48B4
	@single_brd_lib.RADIO_MLB	
BB_I2S2_RXD	BB_I2S2_RXD -	44A8 48B4
	@single_brd_lib.RADIO_MLB	
BB_I2S2_WS	BB_I2S2_WS -	44A8 48B4
	@single_brd_lib.RADIO_MLB	
BB_I2S_CLK	45_AP_TO_BB_I2S1_BCLK -	3C4 23C6
	@single_brd_lib.SINGLE_BRD	
	BB_I2S_CLK -	44B6 44C8 48B4
	@single_brd_lib.RADIO_MLB	
BB_I2S_MCLK	BB_I2S_MCLK -	44A8 48B4
	@single_brd_lib.RADIO_MLB	
BB_I2S_RXD	AP_TO_BB_I2S1_DOUT -	3C4 23C6
	@single_brd_lib.SINGLE_BRD	
	BB_I2S_RXD -	44B6 44C8 48B4
	@single_brd_lib.RADIO_MLB	
BB_I2S_TXD	BB_TO_AP_I2S1_DIN -	3C4 23C6
	@single_brd_lib.SINGLE_BRD	
	BB_I2S_TXD -	44A6 44C8 48B4
	@single_brd_lib.RADIO_MLB	
BB_I2S_WS	AP_TO_BB_I2S1_LRCLK -	3C4 23C6
	@single_brd_lib.SINGLE_BRD	
	BB_I2S_WS -	44B6 44C8 48B4
	@single_brd_lib.RADIO_MLB	
BB_IPC_GPIO	BB_TO_AP_IPC_GPIO -	7C8 23A6
	@single_brd_lib.SINGLE_BRD	
	BB_IPC_GPIO -	44A8 48B2
	@single_brd_lib.RADIO_MLB	
BB_JTAG_RTCLK	BB_JTAG_RTCLK -	44C3 47B3
	@single_brd_lib.RADIO_MLB	
BB_JTAG_TCK	AP_TO_BB_JTAG_TCK -	3B7 23D3
	@single_brd_lib.SINGLE_BRD	
	BB_JTAG_TCK -	44B8 44C3 47B5
	@single_brd_lib.RADIO_MLB	
BB_JTAG_TDI	AP_TO_BB_JTAG_TDI -	3C7 23D3
	@single_brd_lib.SINGLE_BRD	
	BB_JTAG_TDI -	44B8 44C3 47B5
	@single_brd_lib.RADIO_MLB	
BB_JTAG_TDO	BB_TO_AP_JTAG_TDO -	3C7 23D3
	@single_brd_lib.SINGLE_BRD	
	BB_JTAG_TDO -	44B8 44C3 47B3
	@single_brd_lib.RADIO_MLB	
BB_JTAG_TMS	AP_TO_BB_JTAG_TMS -	3B7 23D3
	@single_brd_lib.SINGLE_BRD	
	BB_JTAG_TMS -	44B8 44C3 47B5
	@single_brd_lib.RADIO_MLB	
BB_JTAG_TRST_L	AP_TO_BB_JTAG_TRST_L -	3D5 23D3
	@single_brd_lib.SINGLE_BRD	
	BB_JTAG_TRST_L -	44B8 44C3 47B5
	@single_brd_lib.RADIO_MLB	
BB_PDM	BB_PDM - @single_brd_lib.RADIO_MLB	48B2 58C7
BB_PDM_FILT	BB_PDM_FILT -	58C6
	@single_brd_lib.RADIO_MLB	
BB_RST_L	AP_TO_BB_RST_L -	3C8 23D6
	@single_brd_lib.SINGLE_BRD	
	BB_RST_L -	44C1 44D8 46C8
	@single_brd_lib.RADIO_MLB	
BB_SPI_TO_PAC_CLK	BB_TO_ANTENNA_PAC_SPI_SCLK -	8C2 23A6
	@single_brd_lib.SINGLE_BRD	
	BB_SPI_TO_PAC_CLK -	44B8 48C4 62C7
	@single_brd_lib.RADIO_MLB	
BB_SPI_TO_PAC_CLK_FILT	BB_SPI_TO_PAC_CLK_FILT -	62C6
	@single_brd_lib.RADIO_MLB	
BB_SPI_TO_PAC_CS	BB_TO_ANTENNA_PAC_SPI_CS -	8B2 23A6
	@single_brd_lib.SINGLE_BRD	
	BB_SPI_TO_PAC_CS -	44B8 48C4 62D7
	@single_brd_lib.RADIO_MLB	

BB_SPI_TO_PAC_CS_FILT	BB_SPI_TO_PAC_CS_FILT -	62D6
	@single_brd_lib.RADIO_MLB	
BB_SPI_TO_PAC_DATA_MOSI	BB_TO_ANTENNA_PAC_SPI_MOSI -	8B2 23A6
	@single_brd_lib.SINGLE_BRD	
	BB_SPI_TO_PAC_DATA_MOSI -	44B8 48C4 62C7
	@single_brd_lib.RADIO_MLB	
BB_SPI_TO_PAC_DATA_MOSI_FILT	BB_SPI_TO_PAC_DATA_MOSI_FILT -	62C6
	@single_brd_lib.RADIO_MLB	
BB_UART_CTS_L	AP_TO_BB_UART4_RTS_L -	3C5 23C6
	@single_brd_lib.SINGLE_BRD	
	BB_UART_CTS_L -	44C3 44C8 48C4
	@single_brd_lib.RADIO_MLB	
BB_UART_RTS_L	BB_TO_AP_UART4_CTS_L -	3C5 23C6
	@single_brd_lib.SINGLE_BRD	
	BB_UART_RTS_L -	44C3 44C8 48C4
	@single_brd_lib.RADIO_MLB	
BB_UART_RXD	AP_TO_BB_UART4_TXD -	3C5 16C4 23C6
	@single_brd_lib.SINGLE_BRD	
	BB_UART_RXD -	44C3 44C8 48C4
	@single_brd_lib.RADIO_MLB	
BB_UART_TXD	BB_TO_AP_UART4_RXD -	3C5 16C4 23C6
	@single_brd_lib.SINGLE_BRD	
	BB_UART_TXD -	44C3 44C8 48C4
	@single_brd_lib.RADIO_MLB	
BB_USB_VBUS	PMU_TO_BB_VBUS_DET -	13B4 23C6
	@single_brd_lib.SINGLE_BRD	
	BB_USB_VBUS -	44C3 44C8 47A5
	@single_brd_lib.RADIO_MLB	
BOARD_ID	BOARD_ID -	46D4
	@single_brd_lib.RADIO_MLB	
BS_SP2T_CTL	BS_SP2T_CTL -	48B2 62B1
	@single_brd_lib.RADIO_MLB	
BT_PCM_CLK	45_AP_TO_BT_I2S3_BCLK -	3C4 23B6
	@single_brd_lib.SINGLE_BRD	
	BT_PCM_CLK -	44B8 65B3
	@single_brd_lib.RADIO_MLB	
BT_PCM_IN	AP_TO_BT_I2S3_DOUT -	3C4 23B6
	@single_brd_lib.SINGLE_BRD	
	BT_PCM_IN -	44B8 65B3
	@single_brd_lib.RADIO_MLB	
BT_PCM_OUT	BT_TO_AP_I2S3_DIN -	3C4 23B6
	@single_brd_lib.SINGLE_BRD	
	BT_PCM_OUT -	44B8 65B3
	@single_brd_lib.RADIO_MLB	
BT_PCM_SYNC	AP_TO_BT_I2S3_LRCLK -	3C4 23B6
	@single_brd_lib.SINGLE_BRD	
	BT_PCM_SYNC -	44B8 65B3
	@single_brd_lib.RADIO_MLB	
BT_REG_ON	PMU_TO_BT_REG_ON -	13B3 23B6
	@single_brd_lib.SINGLE_BRD	
	BT_REG_ON -	44B8 44C1 65C6
	@single_brd_lib.RADIO_MLB	
BT_UART_CTS_L	AP_TO_BT_UART1_RTS_L -	3C5 23B6
	@single_brd_lib.SINGLE_BRD	
	BT_UART_CTS_L -	44B8 65B3
	@single_brd_lib.RADIO_MLB	
BT_UART_RTS_L	BT_TO_AP_UART1_CTS_L -	3C5 23B6
	@single_brd_lib.SINGLE_BRD	
	BT_UART_RTS_L -	44B8 65C3
	@single_brd_lib.RADIO_MLB	
BT_UART_RXD	AP_TO_BT_UART1_TXD -	3C5 23B6
	@single_brd_lib.SINGLE_BRD	
	BT_UART_RXD -	44B6 44B8 65C3
	@single_brd_lib.RADIO_MLB	
BT_UART_TXD	BT_TO_AP_UART1_RXD -	3C5 23B6
	@single_brd_lib.SINGLE_BRD	
	BT_UART_TXD -	44B6 44B8 65C3
	@single_brd_lib.RADIO_MLB	
BT_WAKE	AP_TO_BT_WAKE -	3C8 23B6
	@single_brd_lib.SINGLE_BRD	
	BT_WAKE - @single_brd_lib.RADIO_MLB	44B8 44D1 65C2
CLK32K_AP	45_PMU_TO_WLAN_CLK32K -	13B4 13C6 23D6
	@single_brd_lib.SINGLE_BRD	
	CLK32K_AP -	44C8 44D6 65C7
	@single_brd_lib.RADIO_MLB	
DCDC_ADJ	DCDC_ADJ -	58C5
	@single_brd_lib.RADIO_MLB	
DCDC_EN	DCDC_EN - @single_brd_lib.RADIO_MLB	48C2 58C5
DCDC_MODE	DCDC_MODE -	48B2 58B5
	@single_brd_lib.RADIO_MLB	
DCDC_OUT	DCDC_OUT -	58B4
	@single_brd_lib.RADIO_MLB	
DCDC_PGND	DCDC_PGND -	58B3 58B4 58C4 58C5
	@single_brd_lib.RADIO_MLB	
DEBUG_RST_L	DEBUG_RST_L -	44D3 47B5
	@single_brd_lib.RADIO_MLB	
DRX_BB_I_N	DRX_BB_I_N -	48C8 49C5
	@single_brd_lib.RADIO_MLB	
DRX_BB_I_P	DRX_BB_I_P -	48C8 49C5
	@single_brd_lib.RADIO_MLB	
DRX_BB_Q_N	DRX_BB_Q_N -	48C8 49C5
	@single_brd_lib.RADIO_MLB	
DRX_BB_Q_P	DRX_BB_Q_P -	48C8 49C5
	@single_brd_lib.RADIO_MLB	
EBI1_CAL	EBI1_CAL -	47D2
	@single_brd_lib.RADIO_MLB	
GPIO_6	GPIO_6 - @single_brd_lib.RADIO_MLB	65C5
GPIO_51	GPIO_51 - @single_brd_lib.RADIO_MLB	44C3 48C2
GPIO_DEBUG_LED	GPIO_DEBUG_LED -	44C3 48B4
	@single_brd_lib.RADIO_MLB	
GPS_BB_I_N	GPS_BB_I_N -	48C8 49B5
	@single_brd_lib.RADIO_MLB	
GPS_BB_I_P	GPS_BB_I_P -	48C8 49B5
	@single_brd_lib.RADIO_MLB	
GPS_BB_Q_N	GPS_BB_Q_N -	48C8 49B5
	@single_brd_lib.RADIO_MLB	
GPS_BB_Q_P	GPS_BB_Q_P -	48C8 49B5
	@single_brd_lib.RADIO_MLB	
GSM_PA_HB_EN	GSM_PA_HB_EN -	48B4 57B5
	@single_brd_lib.RADIO_MLB	
GSM_PA_LB_EN	GSM_PA_LB_EN -	48B4 57B5
	@single_brd_lib.RADIO_MLB	
HOST_WAKE_BB	BB_TO_PMU_HOST_WAKE -	13B4 23C6
	@single_brd_lib.SINGLE_BRD	
	HOST_WAKE_BB -	44C1 44D8 48B2
	@single_brd_lib.RADIO_MLB	
HOST_WAKE_BT	BT_TO_PMU_HOST_WAKE -	13B4 23B6
	@single_brd_lib.SINGLE_BRD	
	HOST_WAKE_BT -	44C8 65C3
	@single_brd_lib.RADIO_MLB	
HOST_WAKE_WLAN	WLAN_TO_PMU_HOST_WAKE -	13B4 23C6
	@single_brd_lib.SINGLE_BRD	
	HOST_WAKE_WLAN -	44C8 65B3
	@single_brd_lib.RADIO_MLB	

JTAG_SEL	JTAG_SEL -	65A7 65C6
	@single_brd_lib.RADIO_MLB	
LAT_SW1_CTL	BB_TO_LAT_SW1_CTL -	17B1 23A6
	@single_brd_lib.SINGLE_BRD	
	LAT_SW1_CTL -	44B8 44C1 48C2
	@single_brd_lib.RADIO_MLB	
LAT_SW2_CTL	BB_TO_LAT_SW2_CTL -	17B1 23A6
	@single_brd_lib.SINGLE_BRD	
	LAT_SW2_CTL -	44B8 48C2
	@single_brd_lib.RADIO_MLB	
LAT_SW3_CTL	BB_TO_LAT_SW3_CTL -	17B1 17C5 23A6
	@single_brd_lib.SINGLE_BRD	
	LAT_SW3_CTL -	44B8 48C2
	@single_brd_lib.RADIO_MLB	
LTE_ACTIVE	LTE_ACTIVE -	48B2 65B3
	@single_brd_lib.RADIO_MLB	
LTE_AGG_PA_ON	LTE_AGG_PA_ON -	48B4 65B4
	@single_brd_lib.RADIO_MLB	
LTE_COEX_RXD	LTE_COEX_RXD -	48B2 65A6
	@single_brd_lib.RADIO_MLB	
LTE_COEX_TXD	LTE_COEX_TXD -	44C6 48B2 65A6
	@single_brd_lib.RADIO_MLB	
OSCAR_CONTEXT_A	OSCAR_TO_RADIO_CONTEXT_A -	20C5 23A6
	@single_brd_lib.SINGLE_BRD	
	OSCAR_CONTEXT_A -	44A8 48B2 65B3
	@single_brd_lib.RADIO_MLB	
OSCAR_CONTEXT_B	OSCAR_TO_RADIO_CONTEXT_B -	20C5 23A6
	@single_brd_lib.SINGLE_BRD	
	OSCAR_CONTEXT_B -	44A8 48B2 65B3
	@single_brd_lib.RADIO_MLB	
PAC_TO_BB_SPI_DATA_MISO	ANTENNA_PAC_TO_BB_SPI_MISO -	23A6
	@single_brd_lib.SINGLE_BRD	
	PAC_TO_BB_SPI_DATA_MISO -	44B8 48C4 62D7
	@single_brd_lib.RADIO_MLB	
PAC_TO_BB_SPI_DATA_MISO_FILT	PAC_TO_BB_SPI_DATA_MISO_FILT -	62D6
	@single_brd_lib.RADIO_MLB	
PA_B5	PA_B5 - @single_brd_lib.RADIO_MLB	48B4 53D8 54D4 55C3 56D4
PA_ID	PA_ID - @single_brd_lib.RADIO_MLB	46D3
PA_MB_CTL0	PA_MB_CTL0 -	48B4 52B6 53D8
	@single_brd_lib.RADIO_MLB	
PA_MB_CTL1	PA_MB_CTL1 -	48B4 53D8
	@single_brd_lib.RADIO_MLB	
PA_ON_B2_B3	PA_ON_B2_B3 -	48B4 54D4
	@single_brd_lib.RADIO_MLB	
PA_ON_B5_B8	PA_ON_B5_B8 -	48B4 56D4
	@single_brd_lib.RADIO_MLB	
PA_ON_B7_B20	PA_ON_B7_B20 -	48B4 55C3
	@single_brd_lib.RADIO_MLB	
PA_R1	PA_R1 - @single_brd_lib.RADIO_MLB	48C2 53D8 54D4 55C3 56D4
		57B5
PBL_RUN_BB_HSIC1_RDY	BB_TO_AP_HSIC1_RDY -	3C2 23B6
	@single_brd_lib.SINGLE_BRD	
	PBL_RUN_BB_HSIC1_RDY -	44C1 44D8 48B2
	@single_brd_lib.RADIO_MLB	
PMIC_RESOUT_L	PMIC_RESOUT_L -	44C1 46C6 47B5
	@single_brd_lib.RADIO_MLB	
PMIC_SSBI	PMIC_SSBI -	44D6 46C8 47A5
	@single_brd_lib.RADIO_MLB	
PM_MDM_IRQ_L	PM_MDM_IRQ_L -	46C6 48B2
	@single_brd_lib.RADIO_MLB	
PM_USR_IRQ_L	PM_USR_IRQ_L -	46C6 48A2
	@single_brd_lib.RADIO_MLB	
PP_BATT_VCC_2G_PA	PP_BATT_VCC_2G_PA -	57C4
	@single_brd_lib.RADIO_MLB	
PP_BATT_VCC_CONN	PP_BATT_VCC -	12C8 15B7 15D7 22D4 22D5
	@single_brd_lib.SINGLE_BRD	22D8 23D6
	PP_BATT_VCC_CONN -	44D1 44D8 45C8 53D7 54D5
	@single_brd_lib.RADIO_MLB	55C5 56D6 57C5 58C6
PP_BATT_VCC_PA_DCDC	PP_BATT_VCC_PA_DCDC -	58C5
	@single_brd_lib.RADIO_MLB	
PP_BATT_VCC_WLAN	PP_BATT_VCC_WLAN -	65D5
	@single_brd_lib.RADIO_MLB	
PP_LDO1	PP_LDO1 - @single_brd_lib.RADIO_MLB	45B2
PP_LDO2_XO_HS_1V8	PP_LDO2_XO_HS_1V8 -	45B1 47B5
	@single_brd_lib.RADIO_MLB	
PP_LDO3_AMUX_1V8	PP_LDO3_AMUX_1V8 -	45B1 46B5 46D4 47B6
	@single_brd_lib.RADIO_MLB	
PP_LDO4_VDDA_3V3	PP_LDO4_VDDA_3V3 -	45B1 47B6
	@single_brd_lib.RADIO_MLB	
PP_LDO5_GPS_LNA_2V5	PP_LDO5_GPS_LNA_2V5 -	45B1 61C4
	@single_brd_lib.RADIO_MLB	
PP_LDO6_RUIM_1V8	PP_LDO6_RUIM_1V8 -	44A4 44A6 44A8 44D1 45B1
	@single_brd_lib.RADIO_MLB	47A6
PP_LDO7_DAC_1V8	PP_LDO7_DAC_1V8 -	45B1 47A6
	@single_brd_lib.RADIO_MLB	
PP_LDO8_VDDPX_1V2	PP_LDO8_VDDPX_1V2 -	45B1 47A6
	@single_brd_lib.RADIO_MLB	
PP_LDO9_PLL_1V05	PP_LDO9_PLL_1V05 -	45B1 47B6 47B8 47D8
	@single_brd_lib.RADIO_MLB	
PP_LDO10_ADSP_1V05	PP_LDO10_ADSP_1V05 -	45B1 47C6 47D7
	@single_brd_lib.RADIO_MLB	
PP_LDO11_MDSP_FW_1V05	PP_LDO11_MDSP_FW_1V05 -	45B1 47C6 47D6
	@single_brd_lib.RADIO_MLB	
PP_LDO12_MDSP_SW_1V05	PP_LDO12_MDSP_SW_1V05 -	45B1 47B6 47D7
	@single_brd_lib.RADIO_MLB	
PP_LDO13_VDDPX_2V95	PP_LDO13_VDDPX_2V95 -	45B1 47A8
	@single_brd_lib.RADIO_MLB	
PP_LDO14_2V65	PP_LDO14_2P65 -	17A7 23D6
	@single_brd_lib.SINGLE_BRD	
	PP_LDO14_2V65 -	44B8 45B1 52B6 53B4 53D4
	@single_brd_lib.RADIO_MLB	59C6 59D3 60D4 62D1 62D3
PP_LDO14_3P4T	PP_LDO14_3P4T -	53D3
	@single_brd_lib.RADIO_MLB	
PP_LDO14_PAC_2V65	PP_LDO14_PAC_2V65 -	62D5
	@single_brd_lib.RADIO_MLB	
PP_LDO14_RX_MOD	PP_LDO14_RX_MOD -	53B3
	@single_brd_lib.RADIO_MLB	
PP_LVS1	PP_LVS1 - @single_brd_lib.RADIO_MLB	44A8 45D1 47B6
PP_PA	PP_PA - @single_brd_lib.RADIO_MLB	53D7 54D5 55C5 56D6 57C5
		58B2
PP_RF1_1V3_DRX_FE	PP_RF1_1V3_DRX_FE -	50B4 50B5
	@single_brd_lib.RADIO_MLB	
	PP_RF1_1V3_DRX_LBLO -	50A5 50B4
	@single_brd_lib.RADIO_MLB	
	PP_RF1_1V3_DRX_MBLO -	50A5 50B4
	@single_brd_lib.RADIO_MLB	
	PP_RF1_1V3_GPS_DIG -	50A1 50D4
	@single_brd_lib.RADIO_MLB	
	PP_RF1_1V3_GPS_LNA -	50A1 50D4
	@single_brd_lib.RADIO_MLB	
	PP_RF1_1V3_GPS_PLL -	50A1 50D4
	@single_brd_lib.RADIO_MLB	
	PP_RF1_1V3_GPS_VCO -	50A1 50D4
	@single_brd_lib.RADIO_MLB	

	PP_RF1_1V3_JAM_DET -	50A6 50B4
	@single_brd_lib.RADIO_MLB	
	PP_RF1_1V3_PRX_FELO1 -	50B4 50B5
	@single_brd_lib.RADIO_MLB	
	PP_RF1_1V3_PRX_FELO2 -	50B4 50B6
	@single_brd_lib.RADIO_MLB	
	PP_RF1_1V3_PRX_PLL -	50A4 50D6
	@single_brd_lib.RADIO_MLB	
	PP_RF1_1V3_PRX_VCO -	50B4 50D6
	@single_brd_lib.RADIO_MLB	
	PP_RF1_1V3_SHDR_PLL -	50A4 50D6
	@single_brd_lib.RADIO_MLB	
	PP_RF1_1V3_SHDR_VCO -	50A4 50C6
	@single_brd_lib.RADIO_MLB	
	PP_RF1_1V3_TX_DA -	50B1 50C6
	@single_brd_lib.RADIO_MLB	
	PP_RF1_1V3_TX_LO -	50B1 50B6
	@single_brd_lib.RADIO_MLB	
	PP_RF1_1V3_TX_SYNTH -	50B1 50C6
	@single_brd_lib.RADIO_MLB	
	PP_RF1_1V3_TX_UPCONVERTER -	50B1 50B6
	@single_brd_lib.RADIO_MLB	
	PP_SMPS2_RF1_1V3_FILT -	50D5 50D8
	@single_brd_lib.RADIO_MLB	
	PP_RF1_1V3_TX_UPCONVERTER -	50B1 50B6
	@single_brd_lib.RADIO_MLB	
	PP_RF1_1V3_TX_SYNTH -	50B1 50C6
	@single_brd_lib.RADIO_MLB	
	PP_RF1_1V3_TX_LO -	50B1 50B6
	@single_brd_lib.RADIO_MLB	
	PP_RF1_1V3_TX_DA -	50B1 50C6
	@single_brd_lib.RADIO_MLB	
	PP_RF1_1V3_SHDR_VCO -	50A4 50C6
	@single_brd_lib.RADIO_MLB	
	PP_RF1_1V3_SHDR_PLL -	50A4 50D6
	@single_brd_lib.RADIO_MLB	
	PP_RF1_1V3_PRX_VCO -	50B4 50D6
	@single_brd_lib.RADIO_MLB	
	PP_RF1_1V3_PRX_PLL -	50A4 50D6
	@single_brd_lib.RADIO_MLB	
	PP_RF1_1V3_PRX_FELO1 -	50B4 50B5
	@single_brd_lib.RADIO_MLB	
	PP_RF1_1V3_JAM_DET -	50A6 50B4
	@single_brd_lib.RADIO_MLB	
	PP_RF1_1V3_GPS_VCO -	50A1 50D4
	@single_brd_lib.RADIO_MLB	
	PP_RF1_1V3_GPS_PLL -	50A1 50D4
	@single_brd_lib.RADIO_MLB	
	PP_RF1_1V3_GPS_LNA -	50A1 50D4
	@single_brd_lib.RADIO_MLB	
	PP_RF1_1V3_GPS_DIG -	50A1 50D4
	@single_brd_lib.RADIO_MLB	
	PP_RF1_1V3_DRX_LBLO -	50A5 50B4
	@single_brd_lib.RADIO_MLB	
PP_RF1_1V8_DIG	PP_RF1_1V8_DIG -	50A1 50C4
	@single_brd_lib.RADIO_MLB	
	PP_SMPS3_MSME_1V8 -	44A8 44D1 45B6 45C1 47A6
	@single_brd_lib.RADIO_MLB	47A6 47A6 47A8 47C6 47D7
		47D8 48B8 48C4 50C5
PP_RF2_2V05_DRX_BB	PP_RF2_2V05_DRX_BB -	50B4 50D1
	@single_brd_lib.RADIO_MLB	
	PP_RF2_2V05_PRX_BB -	50B4 50D1
	@single_brd_lib.RADIO_MLB	
	PP_RF2_2V05_PRX_VCO -	50B4 50C1
	@single_brd_lib.RADIO_MLB	
	PP_RF2_2V05_SHDR_VCO -	50A4 50C1
	@single_brd_lib.RADIO_MLB	
	PP_RF2_2V05_TX_BB -	50B1 50D1
	@single_brd_lib.RADIO_MLB	
	PP_RF2_2V05_TX_DA -	50B1 50D1
	@single_brd_lib.RADIO_MLB	
	PP_RF2_2V05_TX_PLL -	50B1 50C1
	@single_brd_lib.RADIO_MLB	
	PP_RF2_2V05_TX_VCO -	50B1 50C1
	@single_brd_lib.RADIO_MLB	
	PP_RF2_2V05_XO_FILT -	50B1 50C1
	@single_brd_lib.RADIO_MLB	
	PP_SMPS4_RF2_2V05_FILT -	50D3
	@single_brd_lib.RADIO_MLB	
	PP_RF2_2V05_XO_FILT -	50B1 50C1
	@single_brd_lib.RADIO_MLB	
	PP_RF2_2V05_TX_VCO -	50B1 50C1
	@single_brd_lib.RADIO_MLB	
	PP_RF2_2V05_TX_PLL -	50B1 50C1
	@single_brd_lib.RADIO_MLB	
	PP_RF2_2V05_TX_DA -	50B1 50D1
	@single_brd_lib.RADIO_MLB	
	PP_RF2_2V05_TX_BB -	50B1 50D1
	@single_brd_lib.RADIO_MLB	
	PP_RF2_2V05_SHDR_VCO -	50A4 50C1
	@single_brd_lib.RADIO_MLB	
	PP_RF2_2V05_PRX_VCO -	50B4 50C1
	@single_brd_lib.RADIO_MLB	
	PP_RF2_2V05_PRX_BB -	50B4 50D1
	@single_brd_lib.RADIO_MLB	
PP_SMPS1_MSMC_1V05	PP_SMPS1_MSMC_1V05 -	44A8 45D1 47C8 47C8 47D8
	@single_brd_lib.RADIO_MLB	
PP_SMPS2_RF1_1V3	PP_SMPS2_RF1_1V3 -	45D1 47A5 50D8
	@single_brd_lib.RADIO_MLB	
PP_SMPS4_RF2_2V05	PP_SMPS4_RF2_2V05 -	45B6 45C1 50D3
	@single_brd_lib.RADIO_MLB	
PP_SMPS5_DSP_1V05	PP_SMPS5_DSP_1V05 -	45B6 45C1
	@single_brd_lib.RADIO_MLB	
PP_SPI_NOR_1V8	PP_SPI_NOR_1V8 -	48B7
	@single_brd_lib.RADIO_MLB	
PP_SYNC	BB_TO_AP_PP_SYNC -	3C5 23C6
	@single_brd_lib.SINGLE_BRD	
	PP_SYNC - @single_brd_lib.RADIO_MLB	44C8 48B2
PP_VCC_MAIN_WLAN	PP_VCC_MAIN -	10D7 12A8 12B7 12C8 13C2
	@single_brd_lib.SINGLE_BRD	14B4 14B8 14D6 23D6
	PP_VCC_MAIN_WLAN -	44D8 65D6
	@single_brd_lib.RADIO_MLB	
PP_VREG	PP_VREG - @single_brd_lib.RADIO_MLB	45D2
PP_VSW_S1	PP_VSW_S1 -	45C4
	@single_brd_lib.RADIO_MLB	
PP_VSW_S2	PP_VSW_S2 -	45C4
	@single_brd_lib.RADIO_MLB	
PP_VSW_S3	PP_VSW_S3 -	45C4
	@single_brd_lib.RADIO_MLB	
PP_VSW_S4	PP_VSW_S4 -	45C4
	@single_brd_lib.RADIO_MLB	
PP_VSW_S5	PP_VSW_S5 -	45B4
	@single_brd_lib.RADIO_MLB	
PP_WLAN_VDDIO_1V8	PP_WLAN_VDDIO_1V8 -	65B7 65C4

	@single_brd_lib.RADIO_MLB	
PP_WL_BT_VDDIO_AP	PP1V8_SDRAM -	3C8 4B8 10C3 10C7 12D1
	@single_brd_lib.SINGLE_BRD	14B7 16D4 17D7 23D6
	PP_WL_BT_VDDIO_AP -	44C8 65C3
	@single_brd_lib.RADIO_MLB	
PRX_BB_I_N	PRX_BB_I_N -	48C8 49D5
	@single_brd_lib.RADIO_MLB	
PRX_BB_I_P	PRX_BB_I_P -	48C8 49D5
	@single_brd_lib.RADIO_MLB	
PRX_BB_Q_N	PRX_BB_Q_N -	48C8 49D5
	@single_brd_lib.RADIO_MLB	
PRX_BB_Q_P	PRX_BB_Q_P -	48C8 49D5
	@single_brd_lib.RADIO_MLB	
PS_HOLD	PS_HOLD - @single_brd_lib.RADIO_MLB	46C8 48B2
PS_HOLD_PMIC	PS_HOLD_PMIC -	44C3 46C7
	@single_brd_lib.RADIO_MLB	
RADIO_ON_L	AP_TO_RADIO_ON_L -	3C8 23D6
	@single_brd_lib.SINGLE_BRD	
	RADIO_ON_L -	44D3 44D8 46C8
	@single_brd_lib.RADIO_MLB	
REF_BYP	REF_BYP - @single_brd_lib.RADIO_MLB	45C5
REF_GND	REF_GND - @single_brd_lib.RADIO_MLB	45C5
RESET_DET_L	BB_TO_AP_RESET_DET_L -	3C8 23D6
	@single_brd_lib.SINGLE_BRD	
	RESET_DET_L -	44C1 44D8 48B2
	@single_brd_lib.RADIO_MLB	
RESET_PMU_L	PMU_TO_BB_RST_L -	13B3 23D6
	@single_brd_lib.SINGLE_BRD	
	RESET_PMU_L -	44D3 44D8 46C8
	@single_brd_lib.RADIO_MLB	
RF_RESET_L	RESET_1V8_L -	2B7 4D8 13B6 14C6 16C2
	@single_brd_lib.SINGLE_BRD	19B2 22B4 23D6
	RF_RESET_L -	44C3 44D8
	@single_brd_lib.RADIO_MLB	
RREFEXT	RREFEXT - @single_brd_lib.RADIO_MLB	47A5
S1_GND	S1_GND - @single_brd_lib.RADIO_MLB	45B6 45D2 46B6
S2_GND	S2_GND - @single_brd_lib.RADIO_MLB	45B6 45C2 46B6
S3_GND	S3_GND - @single_brd_lib.RADIO_MLB	45B6 45C2 46B6
S4_GND	S4_GND - @single_brd_lib.RADIO_MLB	45B6 45C2 46B6
S5_GND	S5_GND - @single_brd_lib.RADIO_MLB	45B2 45B5 46B6
SDIO_DATA_1	SDIO_DATA_1 -	65A7 65B6
	@single_brd_lib.RADIO_MLB	
SDIO_DATA_2	SDIO_DATA_2 -	65A7 65B6
	@single_brd_lib.RADIO_MLB	
SIMCRD_CLK_CONN	SIMCRD_CLK_CONN -	44A2 44A6 44C1 48C4
	@single_brd_lib.RADIO_MLB	
SIMCRD_IO_CONN	SIMCRD_IO_CONN -	44A4 44A4 44C1 48C4
	@single_brd_lib.RADIO_MLB	
SIMCRD_RST_CONN	SIMCRD_RST_CONN -	44A4 44A6 44C1 48C4
	@single_brd_lib.RADIO_MLB	
SIM_TRAY_DETECT	SIM_TRAY_DETECT -	44A2 44A5 44C1 48C4
	@single_brd_lib.RADIO_MLB	
SLEEP_CLK_32K	SLEEP_CLK_32K -	44D6 46B2 47B5
	@single_brd_lib.RADIO_MLB	
SPI_CLK	SPI_CLK - @single_brd_lib.RADIO_MLB	48A8 48C4
SPI_CS_L	SPI_CS_L -	48A6 48C4
	@single_brd_lib.RADIO_MLB	
SPI_DATA_MISO	SPI_DATA_MISO -	48A6 48C4
	@single_brd_lib.RADIO_MLB	
SPI_DATA_MOSI	SPI_DATA_MOSI -	48A8 48C4
	@single_brd_lib.RADIO_MLB	
TX_BB_I_N	TX_BB_I_N -	48C6 49D4
	@single_brd_lib.RADIO_MLB	
TX_BB_I_P	TX_BB_I_P -	48C6 49D4
	@single_brd_lib.RADIO_MLB	
TX_BB_Q_N	TX_BB_Q_N -	48C6 49D4
	@single_brd_lib.RADIO_MLB	
TX_BB_Q_P	TX_BB_Q_P -	48C6 49D4
	@single_brd_lib.RADIO_MLB	
TX_GTR_THRESH	BB_TO_LEDDRV_GSM_BLANK -	15A6 23D6
	@single_brd_lib.SINGLE_BRD	
	TX_GTR_THRESH -	44D8 48C2
	@single_brd_lib.RADIO_MLB	
TX_GTR_THRESH_OD	BB_TO_AP_SOCHOT0 -	3B1 23A6
	@single_brd_lib.SINGLE_BRD	
	TX_GTR_THRESH_OD -	44A8 48B2
	@single_brd_lib.RADIO_MLB	
VDDPX_BIAS	VDDPX_BIAS -	46D3 47B6
	@single_brd_lib.RADIO_MLB	
VREF_DAC_BIAS	VREF_DAC_BIAS -	46C3 48C6
	@single_brd_lib.RADIO_MLB	
WLAN_BUCK_OUT	WLAN_BUCK_OUT -	65C7
	@single_brd_lib.RADIO_MLB	
WLAN_CLK32K	WLAN_CLK32K -	65C6
	@single_brd_lib.RADIO_MLB	
WLAN_COEX_RXD	WLAN_COEX_RXD -	65A5 65B6
	@single_brd_lib.RADIO_MLB	
WLAN_COEX_TXD	WLAN_COEX_TXD -	44C6 65A5 65B6
	@single_brd_lib.RADIO_MLB	
WLAN_HSIC3_DEVICE_RD	WLAN_TO_AP_HSIC2_RDY -	3C2 23B6
Y	@single_brd_lib.SINGLE_BRD	
	WLAN_HSIC3_DEVICE_RDY -	44C6 44C8 65B3
	@single_brd_lib.RADIO_MLB	
WLAN_HSIC3_RESUME	WLAN_TO_AP_HSIC2_REMOTE_WAKE -	3C2 23B6
	@single_brd_lib.SINGLE_BRD	
	WLAN_HSIC3_RESUME -	44C6 44D8 65B3
	@single_brd_lib.RADIO_MLB	
WLAN_REG_ON	PMU_TO_WLAN_REG_ON -	13B3 23C6
	@single_brd_lib.SINGLE_BRD	
	WLAN_REG_ON -	44C1 44C8 65C6
	@single_brd_lib.RADIO_MLB	
WLAN_SR_VLX1	WLAN_SR_VLX1 -	65B6
	@single_brd_lib.RADIO_MLB	
WLAN_TX_BLANK	WLAN_TX_BLANK -	48B2 65B3
	@single_brd_lib.RADIO_MLB	
WLAN_UART_RXD	AP_TO_WLAN_UART3_TXD -	3C5 23C6
	@single_brd_lib.SINGLE_BRD	
	WLAN_UART_RXD -	44C8 65B3
	@single_brd_lib.RADIO_MLB	
WLAN_UART_TXD	WLAN_TO_AP_UART3_RXD -	3C5 23C6
	@single_brd_lib.SINGLE_BRD	
	WLAN_UART_TXD -	44C8 65B3
	@single_brd_lib.RADIO_MLB	
WTR_BB_TX_DAC_IREF	WTR_BB_TX_DAC_IREF -	48C6 49D4
	@single_brd_lib.RADIO_MLB	
WTR_GP_DATA0	WTR_GP_DATA0 -	48B2 49D4
	@single_brd_lib.RADIO_MLB	
WTR_GP_DATA1	WTR_GP_DATA1 -	48B2 49D4
	@single_brd_lib.RADIO_MLB	
WTR_GP_DATA2	WTR_GP_DATA2 -	48B2 49C4
	@single_brd_lib.RADIO_MLB	
WTR_RBIAS	WTR_RBIAS -	49C4
	@single_brd_lib.RADIO_MLB	
WTR_RF_ON	WTR_RF_ON -	44C6 48B4 49C4

	@single_brd_lib.RADIO_MLB	
WTR_RX_ON	WTR_RX_ON -	44C6 48B4 49C4
	@single_brd_lib.RADIO_MLB	
WTR_SSBI_PRX_DRX	WTR_SSBI_PRX_DRX -	44C6 48B2 49C4
	@single_brd_lib.RADIO_MLB	
WTR_SSBI_TX_GPS	WTR_SSBI_TX_GPS -	44C6 48B2 49C4
	@single_brd_lib.RADIO_MLB	
XO_GND	XO_GND - @single_brd_lib.RADIO_MLB	46A4
XO_THERM_Y1	XO_THERM_Y1 -	46B4
	@single_brd_lib.RADIO_MLB	

Title: Cref Part Report
Design: single_brd
Date: Sep 7 13:12:06 2012

BS1	PCB_STANDOFF	single_brd[22A5]
BS2	PCB_STANDOFF	single_brd[22A5]
C1	CAP_01005	single_brd[2B7]
C1_RF	SUPPR_TRANSIENT_2P1_01005	radio_mlb[44A4]single_brd[23]
C2	CAP_0201	single_brd[2C6]
C2_RF	CAP_0201-1	radio_mlb[45B4]single_brd[23]
C3	CAP_0204	single_brd[6D3]
C3_RF	CAP_0201-1	radio_mlb[45B4]single_brd[23]
C4	CAP_01005	single_brd[17C7]
C4_RF	CAP_0201-1	radio_mlb[45B4]single_brd[23]
C5	CAP_01005	single_brd[17C6]
C5_RF	CAP_0201-1	radio_mlb[45A3]single_brd[23]
C6	CAP_01005	single_brd[7C6]
C6_RF	CAP_0201-1	radio_mlb[45B3]single_brd[23]
C7	CAP_01005	single_brd[7C6]
C7_RF	CAP_0201-1	radio_mlb[45A3]single_brd[23]
C8	CAP_01005	single_brd[17C6]
C8_RF	CAP_0402-1	radio_mlb[45B3]single_brd[23]
C9	CAP_01005	single_brd[22D6]
C9_RF	CAP_0402-1	radio_mlb[45A3]single_brd[23]
C10	CAP_01005	single_brd[12A5]
C10_RF	CAP_0402-1	radio_mlb[45B3]single_brd[23]
C11	CAP_0201	single_brd[20C3]
C11_RF	CAP_0402-1	radio_mlb[45A2]single_brd[23]
C12	CAP_01005	single_brd[17A6]
C12_RF	CAP_0201-1	radio_mlb[45D2]single_brd[23]
C13	CAP_01005	single_brd[17A6]
C13_RF	CAP_0402-1	radio_mlb[45B2]single_brd[23]
C14	CAP_01005	single_brd[17B2]
C14_RF	CAP_0201-1	radio_mlb[47D8]single_brd[23]
C15_RF	CAP_0201-1	radio_mlb[47D8]single_brd[23]
C16_RF	CAP_0201-1	radio_mlb[47D8]single_brd[23]
C17	CAP_01005	single_brd[19B4]
C17_RF	CAP_0201-1	radio_mlb[47D8]single_brd[23]
C18	CAP_01005	single_brd[19A4]
C18_RF	CAP_0201-1	radio_mlb[47D7]single_brd[23]
C19	CAP_01005	single_brd[19A4]
C19_RF	CAP_0201-1	radio_mlb[47D7]single_brd[23]
C20	CAP_01005	single_brd[2C5]
C20_RF	CAP_0201-1	radio_mlb[47D7]single_brd[23]
C21	CAP_01005	single_brd[2C5]
C21_RF	CAP_0201-1	radio_mlb[47D7]single_brd[23]
C22	CAP_01005	single_brd[22D6]
C22_RF	CAP_0201-1	radio_mlb[47D7]single_brd[23]
C23	CAP_01005	single_brd[22D8]
C23_RF	CAP_0201-1	radio_mlb[47D7]single_brd[23]
C24_RF	CAP_0201-1	radio_mlb[47D7]single_brd[23]
C25	CAP_01005	single_brd[22D7]
C25_RF	CAP_0201-1	radio_mlb[47D7]single_brd[23]
C26	CAP_01005	single_brd[10B7]
C26_RF	CAP_0201-1	radio_mlb[47D7]single_brd[23]
C27	CAP_01005	single_brd[10A7]
C27_RF	CAP_0201-1	radio_mlb[47D6]single_brd[23]
C28_RF	CAP_0201-1	radio_mlb[47D6]single_brd[23]
C29	CAP_0201-1	single_brd[15C4]
C29_RF	CAP_0201-1	radio_mlb[47D6]single_brd[23]
C30	CAP_0610	single_brd[5B5]
C30_RF	CAP_0201-1	radio_mlb[47D6]single_brd[23]
C31	CAP_0201-1	single_brd[16B5]
C31_RF	CAP_01005	radio_mlb[47B6]single_brd[23]
C32_RF	CAP_0201-1	radio_mlb[47D6]single_brd[23]
C33	CAP_01005	single_brd[2C6]
C33_RF	CAP_0201-1	radio_mlb[47A6]single_brd[23]
C34_RF	CAP_0201-1	radio_mlb[47D6]single_brd[23]
C35	CAP_01005	single_brd[2C4]
C35_RF	CAP_0201-1	radio_mlb[47D5]single_brd[23]
C36	CAP_01005	single_brd[2C2]
C36_RF	CAP_0201-1	radio_mlb[47D5]single_brd[23]
C37	CAP_01005	single_brd[2C2]
C37_RF	CAP_01005	radio_mlb[65C4]single_brd[23]
C38	CAP_0201-1	single_brd[16D5]
C38_RF	CAP_01005	radio_mlb[62C6]single_brd[23]
C39	CAP_01005	single_brd[16D4]
C39_RF	CAP_01005	radio_mlb[59B5]single_brd[23]
C40	CAP_0204	single_brd[4B7]
C40_RF	CAP_01005	radio_mlb[59C5]single_brd[23]
C41	CAP_01005	single_brd[4D8]
C41_RF	CAP_402	radio_mlb[58B3]single_brd[23]
C42_RF	CAP_0402-1	radio_mlb[45C8]single_brd[23]
C43	CAP_0204	single_brd[4B8]
C43_RF	CAP_0402-1	radio_mlb[45C7]single_brd[23]
C44	CAP_01005	single_brd[11A4]
C44_RF	CAP_0402-1	radio_mlb[45C7]single_brd[23]
C45	CAP_01005	single_brd[8C3]
C45_RF	CAP_01005	radio_mlb[45C7]single_brd[23]
C46_RF	CAP_0402	radio_mlb[45B6]single_brd[23]
C47	CAP_402	single_brd[14D5]
C47_RF	CAP_0402	radio_mlb[45B6]single_brd[23]
C48	CAP_0204	single_brd[4A8]
C48_RF	CAP_0402	radio_mlb[45B6]single_brd[23]
C49	CAP_0204	single_brd[4C7]
C49_RF	CAP_0402	radio_mlb[45B6]single_brd[23]
C50	CAP_0201	single_brd[6C4]
C50_RF	CAP_01005	radio_mlb[45C5]single_brd[23]
C51	CAP_01005	single_brd[9B2]
C51_RF	CAP_0402	radio_mlb[45B5]single_brd[23]
C52	CAP_0402-1	single_brd[14C4]
C52_RF	CAP_0201-1	radio_mlb[45A4]single_brd[23]
C53	CAP_0204	single_brd[4C8]
C53_RF	CAP_0201-1	radio_mlb[45A4]single_brd[23]
C54	CAP_0402-1	single_brd[14D4]
C54_RF	CAP_0201-1	radio_mlb[45A4]single_brd[23]
C55	CAP_01005	single_brd[9B7]
C55_RF	CAP_603	radio_mlb[45D2]single_brd[23]
C56	CAP_01005	single_brd[11B7]
C56_RF	CAP_603	radio_mlb[45C2]single_brd[23]
C57	CAP_0610	single_brd[4B8]
C57_RF	CAP_0603-3	radio_mlb[45C2]single_brd[23]
C58	CAP_0402	single_brd[12C3]
C58_RF	CAP_0603-3	radio_mlb[45C2]single_brd[23]
C59	CAP_0204	single_brd[4C7]
C59_RF	CAP_603	radio_mlb[45B2]single_brd[23]
C60	CAP_0204	single_brd[4A7]
C60_RF	CAP_01005	radio_mlb[45C2]single_brd[23]
C61	CAP_01005	single_brd[9B7]
C61_RF	CAP_01005	radio_mlb[48B7]single_brd[23]
C62	CAP_01005	single_brd[11C6]
C62_RF	CAP_01005	radio_mlb[48C6]single_brd[23]
C63	CAP_01005	single_brd[11C6]
C63_RF	CAP_01005	radio_mlb[59B5]single_brd[23]
C64	CAP_01005	single_brd[9B6]
C64_RF	CAP_01005	radio_mlb[59B4]single_brd[23]
C65	CAP_01005	single_brd[9B6]
C65_RF	CAP_01005	radio_mlb[59B4]single_brd[23]
C66	CAP_0402	single_brd[12C1]
C66_RF	CAP_01005	radio_mlb[59B4]single_brd[23]
C67	CAP_01005	single_brd[11C3]
C67_RF	CAP_01005	radio_mlb[51B4]single_brd[23]
C68	CAP_0610	single_brd[4C3]
C68_RF	CAP_0201-1	radio_mlb[47C8]single_brd[23]
C69	CAP_0402-1	single_brd[14C4]
C69_RF	CAP_0201-1	radio_mlb[47A6]single_brd[23]
C70	CAP_01005	single_brd[17B4]
C70_RF	CAP_0201-1	radio_mlb[47A6]single_brd[23]
C71	CAP_01005	single_brd[17B4]
C71_RF	CAP_0201-1	radio_mlb[47B6]single_brd[23]
C72	CAP_4P1_0402	single_brd[4C3]
C72_RF	CAP_0402-1	radio_mlb[50D7]single_brd[23]
C73	CAP_01005	single_brd[15A4]
C73_RF	CAP_01005	radio_mlb[50D6]single_brd[23]
C74	CAP_4P1_0402	single_brd[20D5]
C74_RF	CAP_01005	radio_mlb[50D5]single_brd[23]
C75	CAP_0402-1	single_brd[4D3]
C75_RF	CAP_01005	radio_mlb[50C6]single_brd[23]
C76_RF	CAP_01005	radio_mlb[50C6]single_brd[23]
C77_RF	CAP_01005	radio_mlb[50C6]single_brd[23]
C78	CAP_0204	single_brd[5B5]
C78_RF	CAP_01005	radio_mlb[50C6]single_brd[23]
C79	CAP_01005	single_brd[18C8]
C79_RF	CAP_01005	radio_mlb[50B6]single_brd[23]
C80	CAP_0402-1	single_brd[4D3]
C80_RF	CAP_01005	radio_mlb[50B6]single_brd[23]
C81	CAP_0204	single_brd[5C3]
C81_RF	CAP_01005	radio_mlb[50B6]single_brd[23]
C82	CAP_01005	single_brd[21A6]
C82_RF	CAP_01005	radio_mlb[50A6]single_brd[23]
C83	CAP_4P1_0402	single_brd[4C3]
C83_RF	CAP_01005	radio_mlb[50A6]single_brd[23]
C84	CAP_01005	single_brd[21A5]
C84_RF	CAP_01005	radio_mlb[57B6]single_brd[23]
C85	CAP_01005	single_brd[5A2]
C85_RF	CAP_01005	radio_mlb[50D5]single_brd[23]
C86	CAP_0204	single_brd[5B5]
C86_RF	CAP_01005	radio_mlb[50D5]single_brd[23]
C87	CAP_4P1_0402	single_brd[4C3]
C87_RF	CAP_0201-1	radio_mlb[50C5]single_brd[23]
C88	CAP_01005	single_brd[19C3]
C88_RF	CAP_0402-1	radio_mlb[50D3]single_brd[23]
C89	CAP_4P1_0402	single_brd[4C3]
C89_RF	CAP_01005	radio_mlb[50C1]single_brd[23]
C90	CAP_01005	single_brd[19C3]
C90_RF	CAP_01005	radio_mlb[50C1]single_brd[23]
C91	CAP_0204	single_brd[5B3]
C91_RF	CAP_01005	radio_mlb[50C1]single_brd[23]
C92	CAP_4P1_0402	single_brd[20D6]
C92_RF	CAP_01005	radio_mlb[50B1]single_brd[23]
C93	CAP_01005	single_brd[19C3]
C93_RF	CAP_01005	radio_mlb[51A5]single_brd[23]
C94	CAP_01005	single_brd[19D3]
C94_RF	CAP_201	radio_mlb[62A5]single_brd[23]
C95	CAP_0204	single_brd[5B5]
C95_RF	CAP_201	radio_mlb[62A5]single_brd[23]
C96	CAP_01005	single_brd[12B7]
C96_RF	CAP_01005	radio_mlb[62C6]single_brd[23]
C97	CAP_4P1_0402	single_brd[4B3]
C97_RF	CAP_01005	radio_mlb[62C6]single_brd[23]
C98	CAP_01005	single_brd[17D2]
C98_RF	CAP_01005	radio_mlb[62C6]single_brd[23]
C99	CAP_01005	single_brd[17A5]
C99_RF	CAP_01005	radio_mlb[62D4]single_brd[23]
C100	CAP_4P1_0402	single_brd[4B3]
C101	CAP_01005	single_brd[17D3]
C101_RF	CAP_201	radio_mlb[62B7]single_brd[23]
C102	CAP_01005	single_brd[17A5]
C102_RF	CAP_402	radio_mlb[65B7]single_brd[23]
C103	CAP_01005	single_brd[17D3]
C103_RF	CAP_0402-1	radio_mlb[65D5]single_brd[23]
C104	CAP_0201-1	single_brd[12A5]
C104_RF	CAP_01005	radio_mlb[65D5]single_brd[23]
C105	CAP_01005	single_brd[17D3]
C105_RF	CAP_01005	radio_mlb[65C4]single_brd[23]
C106	CAP_01005	single_brd[4A8]
C106_RF	CAP_0201	radio_mlb[65C2]single_brd[23]
C107	CAP_0610	single_brd[4D3]
C107_RF	CAP_0201	radio_mlb[65C2]single_brd[23]
C108	CAP_01005	single_brd[4A8]
C108_RF	CAP_01005	radio_mlb[53D3]single_brd[23]
C109	CAP_0201-1	single_brd[12A4]
C109_RF	CAP_01005	radio_mlb[52B5]single_brd[23]
C110	CAP_01005	single_brd[17D6]
C110_RF	RES_201	radio_mlb[59B3]single_brd[23]
C111	CAP_01005	single_brd[4A7]
C111_RF	CAP_201	radio_mlb[51B2]single_brd[23]
C112	CAP_4P1_0402	single_brd[4B3]
C112_RF	CAP_01005	radio_mlb[53D3]single_brd[23]
C113	CAP_01005	single_brd[4A7]
C113_RF	CAP_01005	radio_mlb[53D4]single_brd[23]
C114	CAP_01005	single_brd[4A5]
C114_RF	CAP_201	radio_mlb[51B5]single_brd[23]
C115	CAP_0204	single_brd[5C2]
C115_RF	CAP_201	radio_mlb[51A5]single_brd[23]
C116	CAP_01005	single_brd[17D6]
C116_RF	CAP_01005	radio_mlb[56C7]single_brd[23]
C117	CAP_01005	single_brd[4A5]
C117_RF	CAP_01005	radio_mlb[56C7]single_brd[23]
C118	CAP_01005	single_brd[4A4]
C118_RF	CAP_01005	radio_mlb[56D5]single_brd[23]
C119	CAP_01005	single_brd[17D3]
C119_RF	CAP_0201-1	radio_mlb[56D5]single_brd[23]
C120	CAP_01005	single_brd[4A4]
C120_RF	IND_0201	radio_mlb[56C3]single_brd[23]
C121	CAP_4P1_0402	single_brd[4B3]
C121_RF	IND_0201	radio_mlb[56C3]single_brd[23]
C122	CAP_4P1_0402	single_brd[4B3]
C122_RF	CAP_01005	radio_mlb[59C5]single_brd[23]
C123	CAP_0402	single_brd[12C4]
C123_RF	CAP_01005	radio_mlb[53D2]single_brd[23]
C124	CAP_4P1_0402	single_brd[4B3]
C124_RF	CAP_01005	radio_mlb[51C4]single_brd[23]
C125_RF	RES_01005	radio_mlb[52D7]single_brd[23]
C126	CAP_01005	single_brd[17D3]
C126_RF	RES_01005	radio_mlb[52C7]single_brd[23]
C127	CAP_0402	single_brd[12C4]
C127_RF	CAP_01005	radio_mlb[46B4]single_brd[23]
C128	CAP_0402	single_brd[12D4]
C128_RF	CAP_01005	radio_mlb[49C5]single_brd[23]
C129_RF	RES_01005	radio_mlb[52C7]single_brd[23]
C130	CAP_01005	single_brd[18C7]
C130_RF	RES_01005	radio_mlb[52C4]single_brd[23]
C131	CAP_0603	single_brd[14B5]
C131_RF	IND_01005	radio_mlb[55C8]single_brd[23]
C132	CAP_0201-1	single_brd[12A3]
C132_RF	CAP_01005	radio_mlb[52B4]single_brd[23]
C133	CAP_0610	single_brd[4C3]
C133_RF	CAP_01005	radio_mlb[53B2]single_brd[23]
C134	CAP_0204	single_brd[5B2]
C134_RF	CAP_01005	radio_mlb[53B2]single_brd[23]
C135	CAP_0402	single_brd[12D3]
C136	CAP_01005	single_brd[6C6]
C136_RF	CAP_01005	radio_mlb[60C6]single_brd[23]
C137	CAP_201	single_brd[18B4]
C137_RF	CAP_01005	radio_mlb[60C6]single_brd[23]
C138	CAP_01005	single_brd[9B2]
C138_RF	CAP_01005	radio_mlb[60C5]single_brd[23]
C139_RF	CAP_01005	radio_mlb[60D3]single_brd[23]
C140	CAP_0402	single_brd[12C2]
C140_RF	RES_201	radio_mlb[59C4]single_brd[23]
C141	CAP_0610	single_brd[4D5]
C141_RF	CAP_01005	radio_mlb[53D7]single_brd[23]
C142	CAP_01005	single_brd[4D1]
C142_RF	CAP_01005	radio_mlb[53D6]single_brd[23]
C143	CAP_01005	single_brd[9B2]
C143_RF	CAP_01005	radio_mlb[53D6]single_brd[23]
C144	CAP_01005	single_brd[6C6]
C144_RF	CAP_01005	radio_mlb[58B6]single_brd[23]
C145	CAP_0402	single_brd[12D3]
C145_RF	CAP_01005	radio_mlb[58B6]single_brd[23]
C146_RF	RES_01005	radio_mlb[54C7]single_brd[23]
C147	CAP_01005	single_brd[18B4]
C147_RF	CAP_01005	radio_mlb[54C6]single_brd[23]
C148_RF	CAP_01005	radio_mlb[54D5]single_brd[23]
C149	CAP_0402-1	single_brd[18D4]
C149_RF	CAP_0201-1	radio_mlb[54D5]single_brd[23]
C150	CAP_01005	single_brd[18B4]
C150_RF	CAP_201	radio_mlb[54C3]single_brd[23]
C151	CAP_0402-1	single_brd[4D3]
C151_RF	CAP_201	radio_mlb[54C3]single_brd[23]
C152	CAP_0610	single_brd[4D3]
C152_RF	CAP_01005	radio_mlb[53D6]single_brd[23]
C153	CAP_0204	single_brd[4D2]
C153_RF	CAP_01005	radio_mlb[53D6]single_brd[23]
C154_RF	CAP_01005	radio_mlb[53D6]single_brd[23]
C155_RF	IND_01005	radio_mlb[60C6]single_brd[23]
C156	CAP_0402-1	single_brd[18D3]
C156_RF	IND_01005	radio_mlb[60B6]single_brd[23]
C157_RF	CAP_01005	radio_mlb[62D2]single_brd[23]
C158	CAP_4P1_0402	single_brd[4D2]
C158_RF	CAP_01005	radio_mlb[62B2]single_brd[23]
C159	CAP_01005	single_brd[13C8]
C160	CAP_0610	single_brd[4D5]
C160_RF	CAP_01005	radio_mlb[52B7]single_brd[23]
C161	CAP_4P1_0402	single_brd[4D1]
C161_RF	CAP_01005	radio_mlb[51C7]single_brd[23]
C162	CAP_0402	single_brd[12D3]
C162_RF	CAP_01005	radio_mlb[51B7]single_brd[23]
C163	CAP_201	single_brd[18D2]
C163_RF	CAP_01005	radio_mlb[51C6]single_brd[23]
C164_RF	CAP_01005	radio_mlb[51C6]single_brd[23]
C165	CAP_01005	single_brd[18D2]
C165_RF	CAP_01005	radio_mlb[51C6]single_brd[23]
C166	CAP_4P1_0402	single_brd[4C5]
C166_RF	CAP_01005	radio_mlb[51B6]single_brd[23]
C167	CAP_01005	single_brd[13B8]
C167_RF	CAP_01005-1	radio_mlb[57C7]single_brd[23]
C168	CAP_01005	single_brd[13A8]
C168_RF	CAP_01005	radio_mlb[58B3]single_brd[23]
C169	CAP_4P1_0402	single_brd[4C5]
C169_RF	CAP_01005	radio_mlb[58C4]single_brd[23]
C170	CAP_0201	single_brd[18D2]
C170_RF	CAP_0201	radio_mlb[65C2]single_brd[23]
C171_RF	CAP_01005	radio_mlb[57B7]single_brd[23]
C172_RF	CAP_01005	radio_mlb[57C6]single_brd[23]
C173	CAP_0204	single_brd[4D2]
C173_RF	CAP_01005	radio_mlb[52B6]single_brd[23]
C174	CAP_4P1_0402	single_brd[4C5]
C174_RF	RES_01005	radio_mlb[52B4]single_brd[23]
C175	CAP_0402	single_brd[12C4]
C175_RF	CAP_01005	radio_mlb[53D3]single_brd[23]
C176	CAP_01005	single_brd[17B7]
C176_RF	CAP_01005	radio_mlb[53D3]single_brd[23]
C177	CAP_0610	single_brd[4D5]
C179	CAP_0201-1	single_brd[12A4]
C180	CAP_0204	single_brd[6D4]
C181	CAP_0402	single_brd[12D3]
C182	CAP_0402-1	single_brd[6D3]
C182_RF	CAP_01005	radio_mlb[49C4]single_brd[23]
C183_RF	CAP_01005	radio_mlb[57B5]single_brd[23]
C184	CAP_01005	single_brd[17D6]
C184_RF	CAP_01005	radio_mlb[57C5]single_brd[23]
C185	CAP_0204	single_brd[6D3]
C185_RF	CAP_402	radio_mlb[57C5]single_brd[23]
C186_RF	CAP_01005	radio_mlb[57B5]single_brd[23]
C187	CAP_0402-1	single_brd[6D2]
C187_RF	CAP_0201-1	radio_mlb[57C4]single_brd[23]
C188	CAP_01005	single_brd[17B3]
C188_RF	CAP_01005	radio_mlb[57C4]single_brd[23]
C189	CAP_0402	single_brd[12C3]
C189_RF	CAP_01005	radio_mlb[58C5]single_brd[23]
C190	CAP_0204	single_brd[7D7]
C191	CAP_01005	single_brd[7C5]
C192	CAP_01005	single_brd[11D6]
C193	CAP_603	single_brd[11C2]
C194	CAP_0201-1	single_brd[11C6]
C196	CAP_01005	single_brd[11C6]
C197	CAP_01005	single_brd[8B6]
C197_RF	CAP_01005	radio_mlb[60B5]single_brd[23]
C198	CAP_01005	single_brd[11D6]
C198_RF	CAP_01005	radio_mlb[60D4]single_brd[23]
C199	CAP_01005	single_brd[11B6]
C200	CAP_01005	single_brd[11A4]
C201	CAP_01005	single_brd[11C7]
C202	CAP_01005	single_brd[11D6]
C204	CAP_0402-1	single_brd[12D7]
C205	CAP_0201-1	single_brd[12A3]
C206	CAP_01005	single_brd[17B2]
C207	CAP_0201-1	single_brd[12A4]
C208	CAP_01005	single_brd[8B4]
C209	CAP_0402-1	single_brd[6D2]
C210	CAP_01005	single_brd[11B6]
C210_RF	CAP_01005	radio_mlb[60C6]single_brd[23]
C211	CAP_01005	single_brd[11B7]
C211_RF	CAP_01005	radio_mlb[52B6]single_brd[23]
C212	CAP_01005	single_brd[11B6]
C212_RF	CAP_01005	radio_mlb[52B6]single_brd[23]
C213	CAP_01005	single_brd[14B5]
C213_RF	CAP_01005	radio_mlb[52D7]single_brd[23]
C214	CAP_01005	single_brd[14A5]
C214_RF	IND_01005	radio_mlb[52D7]single_brd[23]
C215	CAP_0201-1	single_brd[17B7]
C215_RF	IND_01005	radio_mlb[52C7]single_brd[23]
C216	CAP_0201-1	single_brd[8C3]
C216_RF	IND_01005	radio_mlb[55C8]single_brd[23]
C217_RF	IND_01005	radio_mlb[52C7]single_brd[23]
C218	CAP_402	single_brd[10B7]
C218_RF	CAP_01005	radio_mlb[55C8]single_brd[23]
C219	CAP_402	single_brd[10A7]
C219_RF	CAP_01005	radio_mlb[55B8]single_brd[23]
C220	CAP_01005	single_brd[9C7]
C220_RF	IND_01005	radio_mlb[52D7]single_brd[23]
C221	CAP_01005	single_brd[9C7]
C221_RF	CAP_0201	radio_mlb[61B6]single_brd[23]
C222	CAP_01005	single_brd[9C7]
C223	CAP_01005	single_brd[9C7]
C224	CAP_01005	single_brd[9B7]
C225	CAP_01005	single_brd[9B7]
C226	CAP_01005	single_brd[9C6]
C226_RF	RES_01005	radio_mlb[52D4]single_brd[23]
C227	CAP_01005	single_brd[9C6]
C227_RF	CAP_01005	radio_mlb[55C6]single_brd[23]
C228	CAP_01005	single_brd[9B6]
C228_RF	CAP_01005	radio_mlb[55B5]single_brd[23]
C229	CAP_01005	single_brd[9C6]
C229_RF	CAP_01005	radio_mlb[55C4]single_brd[23]
C230	CAP_01005	single_brd[9C6]
C230_RF	CAP_0201-1	radio_mlb[55C4]single_brd[23]
C231	CAP_01005	single_brd[9B6]
C232	CAP_402	single_brd[10C5]
C233	CAP_402	single_brd[10C5]
C233_RF	CAP_0201	radio_mlb[55C2]single_brd[23]
C234	CAP_402	single_brd[10B5]
C234_RF	IND_0201	radio_mlb[55B2]single_brd[23]
C235	CAP_01005	single_brd[9C3]
C236	CAP_01005	single_brd[9C3]
C237	CAP_0201-1	single_brd[10B8]
C237_RF	CAP_01005	radio_mlb[53B7]single_brd[23]
C238	CAP_402	single_brd[10B8]
C238_RF	CAP_01005	radio_mlb[53C7]single_brd[23]
C239_RF	CAP_01005	radio_mlb[53C7]single_brd[23]
C240	CAP_01005	single_brd[17B4]
C240_RF	CAP_01005	radio_mlb[53C7]single_brd[23]
C241	CAP_01005	single_brd[8B4]
C241_RF	CAP_01005	radio_mlb[53D6]single_brd[23]
C242	CAP_01005	single_brd[17D6]
C242_RF	CAP_0201-1	radio_mlb[53D6]single_brd[23]
C243	CAP_01005	single_brd[19B4]
C244	CAP_01005	single_brd[8C3]
C244_RF	CAP_01005	radio_mlb[50D1]single_brd[23]
C245_RF	CAP_201	radio_mlb[53B5]single_brd[23]
C246_RF	CAP_01005	radio_mlb[53B5]single_brd[23]
C247_RF	CAP_01005	radio_mlb[62D5]single_brd[23]
C248_RF	RES_201	radio_mlb[53C4]single_brd[23]
C249	CAP_0201-1	single_brd[21B6]
C249_RF	RES_201	radio_mlb[53C4]single_brd[23]
C250	CAP_0402-1	single_brd[12A7]
C250_RF	CAP_201	radio_mlb[53D4]single_brd[23]
C251	CAP_0402-1	single_brd[12A7]
C251_RF	CAP_01005	radio_mlb[49C2]single_brd[23]
C252	CAP_0402-1	single_brd[14B8]
C252_RF	CAP_201	radio_mlb[53C3]single_brd[23]
C253	CAP_01005	single_brd[11B3]
C253_RF	CAP_01005	radio_mlb[53B3]single_brd[23]
C254	CAP_01005	single_brd[16D5]
C255_RF	CAP_01005	radio_mlb[53B2]single_brd[23]
C256	CAP_0402	single_brd[11A3]
C256_RF	CAP_01005	radio_mlb[53B2]single_brd[23]
C258	CAP_01005	single_brd[19B3]
C258_RF	RES_201	radio_mlb[53C2]single_brd[23]
C259	CAP_01005	single_brd[7C5]
C260	CAP_0402-1	single_brd[12B8]
C261	CAP_0402-1	single_brd[12B8]
C261_RF	CAP_201	radio_mlb[53C4]single_brd[23]
C262	CAP_0402	single_brd[12D3]
C263	CAP_0402-1	single_brd[12B8]
C263_RF	CAP_01005	radio_mlb[53C2]single_brd[23]
C264	CAP_0402-1	single_brd[12B8]
C264_RF	CAP_201	radio_mlb[53B6]single_brd[23]
C265	CAP_01005	single_brd[13B6]
C266	CAP_0201-1	single_brd[12C8]
C267	CAP_0402-1	single_brd[12B8]
C268	CAP_0402-1	single_brd[12B8]
C268_RF	CAP_01005	radio_mlb[59C3]single_brd[23]
C269_RF	CAP_01005	radio_mlb[59C2]single_brd[23]
C270	CAP_0402-1	single_brd[12B7]
C271	CAP_0402-1	single_brd[12B7]
C271_RF	CAP_01005	radio_mlb[62D2]single_brd[23]
C272	CAP_402	single_brd[12C7]
C272_RF	CAP_01005	radio_mlb[53D3]single_brd[23]
C273_RF	CAP_01005	radio_mlb[53B3]single_brd[23]
C274	CAP_01005	single_brd[7C4]
C274_RF	CAP_01005	radio_mlb[50C6]single_brd[23]
C275	CAP_01005	single_brd[22D6]
C276	CAP_01005	single_brd[12A7]
C278	CAP_402	single_brd[12B7]
C279	CAP_01005	single_brd[22D6]
C280	CAP_01005	single_brd[7B5]
C280_RF	CAP_0201	radio_mlb[65C2]single_brd[23]
C281	CAP_0402-1	single_brd[12D7]
C281_RF	CAP_0201	radio_mlb[65C2]single_brd[23]
C282	CAP_4P1_0402	single_brd[4C5]
C283	CAP_01005	single_brd[12A7]
C284	CAP_01005	single_brd[7B4]
C285	CAP_0610	single_brd[4C8]
C286	CAP_01005	single_brd[21B5]
C287	CAP_01005	single_brd[21B5]
C289	CAP_0201-1	single_brd[8C6]
C290	CAP_0402	single_brd[12D4]
C291	CAP_01005	single_brd[12A3]
C292	CAP_0402	single_brd[12D4]
C293	CAP_0402	single_brd[12D2]
C294	CAP_0402	single_brd[12D3]

C295	CAP_01005	single_brd[19B3]
C296	CAP_0402	single_brd[12D4]
C297	CAP_0402-1	single_brd[14B8]
C298	CAP_0201-1	single_brd[20A6]
C299	CAP_402	single_brd[12A4]
C300	CAP_01005	single_brd[20A6]
C301	CAP_0402	single_brd[12C4]
C302	CAP_0610	single_brd[4B7]
C303	CAP_0402	single_brd[12C4]
C304	CAP_0402	single_brd[16D2]
C305	CAP_0610	single_brd[5C2]
C306	CAP_0201	single_brd[18D5]
C307	CAP_0402-1	single_brd[6D2]
C308	CAP_0402	single_brd[12D2]
C309	CAP_01005	single_brd[15C4]
C310	CAP_0402	single_brd[12C3]
C311	CAP_01005	single_brd[8B6]
C313	CAP_01005	single_brd[8B6]
C314	CAP_01005	single_brd[8B6]
C315	CAP_0402	single_brd[18D4]
C316	CAP_0402	single_brd[12D1]
C317	CAP_201	single_brd[13C4]
C318	CAP_0201-1	single_brd[13C4]
C319	CAP_201	single_brd[13C4]
C320	CAP_P_0603-LLP	single_brd[18A4]
C321	CAP_P_0402	single_brd[18B4]
C322	CAP_01005	single_brd[13B8]
C323	CAP_01005	single_brd[13C3]
C324	CAP_0402	single_brd[18D4]
C325	CAP_0402-1	single_brd[12A8]
C326	CAP_01005	single_brd[13C3]
C327	CAP_0402	single_brd[12C1]
C328	CAP_0201	single_brd[18B3]
C329	CAP_0603	single_brd[14C3]
C330	CAP_0402-1	single_brd[14C3]
C331	CAP_0402	single_brd[18D4]
C332	CAP_0402-1	single_brd[15C6]
C333	CAP_0402-1	single_brd[15C7]
C334	CAP_0201-1	single_brd[20B3]
C335	CAP_0402-1	single_brd[15D6]
C336	CAP_01005	single_brd[20B3]
C337	CAP_0201-1	single_brd[15D6]
C338	CAP_0201-1	single_brd[16C3]
C339	CAP_201	single_brd[15D5]
C340	CAP_402	single_brd[15C4]
C341	CAP_0201-1	single_brd[15C4]
C342	CAP_0201	single_brd[15D6]
C343	CAP_0201-1	single_brd[12B7]
C344	CAP_01005	single_brd[20D2]
C345	CAP_01005	single_brd[20D3]
C346	CAP_0201	single_brd[18A3]
C347	CAP_0201-1	single_brd[20D2]
C348	CAP_0603	single_brd[15D6]
C349	CAP_0201	single_brd[18B3]
C350	CAP_0402	single_brd[19D2]
C351	CAP_0402	single_brd[19D2]
C354	CAP_01005	single_brd[9A6]
C355	CAP_01005	single_brd[17B6]
C356	CAP_01005	single_brd[9A6]
C357	CAP_0402-1	single_brd[12C8]
C358	CAP_0402-1	single_brd[12C8]
C359	CAP_01005	single_brd[17B6]
C360	CAP_01005	single_brd[15B3]
C362	CAP_01005	single_brd[9A6]
C363	CAP_01005	single_brd[15B3]
C364	CAP_0201	single_brd[18A3]
C365	CAP_0201	single_brd[18D2]
C366	CAP_0201	single_brd[18C4]
C367	CAP_01005	single_brd[15C3]
C368	CAP_0201	single_brd[17A6]
C369	CAP_0402-1	single_brd[18C7]
C370	CAP_402	single_brd[18C7]
C371	CAP_402	single_brd[18C7]
C372	CAP_0201-1	single_brd[18C6]
C374	SUPPR_TRANSIENT_2P1_01005	single_brd[17C3]
C375	SUPPR_TRANSIENT_2P1_01005	single_brd[17C3]
C376	CAP_0201	single_brd[6D3]
C377	CAP_0402	single_brd[6D3]
C378	CAP_0402	single_brd[6D3]
C379	CAP_0201-1	single_brd[5A5]
C380	CAP_0201	single_brd[11C3]
C381	CAP_0201	single_brd[18D5]
C382	CAP_01005	single_brd[8B3]
C383	CAP_01005	single_brd[8B3]
C384	CAP_01005	single_brd[8B3]
C385	CAP_0402-1	single_brd[12B8]
C386	CAP_0402-1	single_brd[15B6]
C387	CAP_0402-1	single_brd[15B6]
C389	CAP_0201-1	single_brd[21C6]
C390	CAP_0201-1	single_brd[21C6]
C391	CAP_0201-1	single_brd[21D6]
C392	CAP_01005	single_brd[21C5]
C393	CAP_01005	single_brd[21D5]
C394	CAP_0402-1	single_brd[15B4]
C395	CAP_01005	single_brd[21C5]
C396	CAP_0402-1	single_brd[15B4]
C397	CAP_01005	single_brd[8D3]
C398	CAP_0402-1	single_brd[12B8]
C399	CAP_0402-1	single_brd[12A8]
C400	CAP_01005	single_brd[21A5]
C401	CAP_0402-1	single_brd[12B8]
C402	CAP_01005	single_brd[11C3]
C403	CAP_0201-1	single_brd[21B5]
C404	CAP_01005	single_brd[21B5]
C405	CAP_0402-1	single_brd[12A8]
C406	CAP_01005	single_brd[8D6]
C407	CAP_01005	single_brd[11C3]
C408	CAP_01005	single_brd[15A4]
C409	CAP_01005	single_brd[8D6]
C410	CAP_01005	single_brd[11C3]
C411	CAP_0402-1	single_brd[12B7]
C412	CAP_0201-1	single_brd[10C7]
C413	CAP_01005	single_brd[10C7]
C414	CAP_0402-1	single_brd[10C7]
C416	CAP_01005	single_brd[10C6]
C417	CAP_0402-1	single_brd[12A7]
C418	CAP_0402-1	single_brd[12A7]
C419	CAP_0201-1	single_brd[12A2]
C420	CAP_201	single_brd[10D6]
C421	CAP_201	single_brd[10D6]
C422	CAP_0402-1	single_brd[10D7]
C423	CAP_0201-1	single_brd[21D6]

C424	CAP_0402-1	single_brd[10B5]
C425	CAP_402	single_brd[10C4]
C427	CAP_01005	single_brd[22A8]
C429	CAP_402	single_brd[10B4]
C430	CAP_01005	single_brd[22A8]
C432	CAP_01005	single_brd[22A7]
C433	CAP_01005	single_brd[22A6]
C434	CAP_01005	single_brd[22A6]
C435	CAP_01005	single_brd[22A6]
C436	CAP_01005	single_brd[22A6]
C437	CAP_01005	single_brd[22A6]
C438	CAP_01005	single_brd[22A6]
C439	CAP_201	single_brd[19D3]
C440	CAP_01005	single_brd[19D4]
C441	CAP_0201	single_brd[14C4]
C442	CAP_0201-1	single_brd[12A3]
C443	CAP_0402	single_brd[12D2]
C444	CAP_01005	single_brd[19D3]
C500	CAP_01005	single_brd[15B2]
C501	CAP_01005	single_brd[15B2]
C1201_RF	CAP_0402	radio_mlb[58C5]single_brd[23]
C1214_RF	CAP_01005	radio_mlb[58C5]single_brd[23]
C1215_RF	CAP_0201-1	radio_mlb[58C4]single_brd[23]
C1400	CAP_0402	single_brd[14B1]
C1401	CAP_01005	single_brd[14B4]
C1402	CAP_01005	single_brd[14B2]
C1403	CAP_0402	single_brd[14B2]
C1726_RF	CAP_01005	radio_mlb[62D7]single_brd[23]
C2307	CAP_01005	single_brd[17B2]
D1	DIODE_SCHOT_2P_SOD-923-HF	single_brd[14B6]
D2	DIODE_SCHOT_SM-201	single_brd[18B4]
D3	DIODE_SCHOT_DFN1006-2	single_brd[8C6]
D1400	DIODE_SCHOT_SM-201	single_brd[14B3]
DZ1	SUPPR_TRANSIENT_2P1_01005-1	single_brd[8B6]
DZ2	SUPPR_TRANSIENT_2P1_01005-1	single_brd[8B6]
DZ3	SUPPR_TRANSIENT_2P1_01005-1	single_brd[8B6]
DZ4	ZENER_GDZ-0201	single_brd[18D3]
DZ7	SUPPR_TRANSIENT_2P1_01005-1	single_brd[8B6]
DZ9	SUPPR_TRANSIENT_2P1_01005	single_brd[17B6]
DZ10	SUPPR_TRANSIENT_2P1_01005	single_brd[17B6]
DZ11	SUPPR_TRANSIENT_2P1_01005	single_brd[17C6]
DZ12	SUPPR_TRANSIENT_2P1_01005	single_brd[17C6]
DZ13	SUPPR_TRANSIENT_2P1_01005	single_brd[17B5]
DZ14	SUPPR_TRANSIENT_2P1_01005	single_brd[17B5]
DZ15	SUPPR_TRANSIENT_2P1_01005-1	single_brd[17B6]
DZ16	SUPPR_TRANSIENT_2P1_01005-1	single_brd[11B5]
DZ17	SUPPR_TRANSIENT_2P1_01005-1	single_brd[11B5]
DZ18	SUPPR_TRANSIENT_2P1_01005-1	single_brd[11B5]
DZ19	SUPPR_TRANSIENT_2P1_01005-1	single_brd[11B5]
DZ101	SUPPR_TRANSIENT_2P1_01005-1	single_brd[8C5]
FD1	FIDUCIAL_0P5SM1P0SQ-NSP	single_brd[22C8]
FD2	FIDUCIAL_0P5SM1P0SQ-NSP	single_brd[22C8]
FD3	FIDUCIAL_0P5SM1P0SQ-NSP	single_brd[22B8]
FD4	FIDUCIAL_0P5SM1P0SQ-NSP	single_brd[22B8]
FD5	FIDUCIAL_0P5SM1P0SQ-NSP	single_brd[22B8]
FD6	FIDUCIAL_0P5SM1P0SQ-NSP	single_brd[22B8]
FL1	FILTER_2P_01005	single_brd[17C7]
FL2	FILTER_2P_01005	single_brd[11B7]
FL2_RF	FIL_SAW_TX_B1B3B34B39_10P_LGA	radio_mlb[52D3]single_brd[23]
FL3	FILTER_2P_01005	single_brd[8B6]
FL3_RF	FILTER_SAW_SATGR832MBM0F57_LGA	radio_mlb[52D6]single_brd[23]
FL4	FILTER_2P_01005	single_brd[11B7]
FL4_RF	FILTER_2P_01005-1	radio_mlb[48B7]single_brd[23]
FL5	FILTER_2P_01005	single_brd[17B7]
FL6	FILTER_2P_0402	single_brd[15C2]
FL7	FILTER_2P_01005	single_brd[8B6]
FL8	FILTER_2P_01005	single_brd[8B6]
FL9	FILTER_2P_0402	single_brd[15C2]
FL9_RF	FILTER_4P10_LFL0Q1G69TM1D511	radio_mlb[62C6]single_brd[23]
FL10	FILTER_2P_01005	single_brd[17C7]
FL11	FILTER_2P_01005	single_brd[22D6]
FL11_RF	FILTER_SAWFD847MGA0F57_LGA	radio_mlb[55C7]single_brd[23]
FL12	FILTER_2P_01005	single_brd[11D7]
FL12_RF	FILTER_3P3_LFL181G95TF	radio_mlb[53C3]single_brd[23]
FL13	FILTER_2P_01005	single_brd[11D7]
FL14	FILTER_2P_01005	single_brd[11C7]
FL15	FILTER_2P_01005	single_brd[11D7]
FL16	FILTER_2P_01005	single_brd[17C6]
FL17	FILTER_2P_01005	single_brd[17C6]
FL19	FILTER_2P_01005-1	single_brd[17D2]
FL20	FILTER_2P_01005	single_brd[11B7]
FL21	FILTER_2P_01005	single_brd[8D3]
FL22	FILTER_2P_01005	single_brd[21A6]
FL23	FILTER_2P_01005-1	single_brd[11C2]
FL24	FILTER_2P_0201-1	single_brd[19B3]
FL25	FILTER_2P_0201-1	single_brd[19A3]
FL26	FILTER_2P_0201-1	single_brd[19A3]
FL27	FILTER_2P_0201-1	single_brd[19D3]
FL28	FILTER_2P_01005	single_brd[21A6]
FL29	FILTER_2P_01005	single_brd[21B6]
FL30	FILTER_2P_01005	single_brd[21B6]
FL31	FILTER_2P_01005	single_brd[21B6]
FL32	FILTER_2P_01005	single_brd[17D2]
FL33	FILTER_2P_01005-1	single_brd[17D6]
FL34	FILTER_2P_01005	single_brd[19C3]

FL35	FILTER_2P_01005	single_brd[19D3]
FL36	FILTER_2P_01005	single_brd[19C3]
FL37	FILTER_2P_0201-1	single_brd[19D3]
FL38	FILTER_2P_01005	single_brd[20B7]
FL39	FILTER_2P_01005	single_brd[20B5]
FL40	FILTER_2P_01005	single_brd[20D7]
FL41	FILTER_2P_01005	single_brd[20D4]
FL42	FILTER_2P_01005	single_brd[20D7]
FL43	FILTER_2P_01005-1	single_brd[21B6]
FL44	FILTER_2P_01005-1	single_brd[11D3]
FL45	FILTER_2P_01005	single_brd[11C7]
FL46	FILTER_2P_01005	single_brd[8B6]
FL47	FILTER_2P_01005	single_brd[8C3]
FL48	FILTER_2P_01005	single_brd[11B2]
FL49	FILTER_2P_01005	single_brd[17B7]
FL50	FILTER_2P_01005	single_brd[17D2]
FL51	FILTER_2P_01005-1	single_brd[11A7]
FL52	FILTER_2P_01005-1	single_brd[11A7]
FL53	FILTER_2P_01005-1	single_brd[17A3]
FL54	FILTER_2P_01005-1	single_brd[17D6]
FL55	FILTER_2P_01005	single_brd[20D4]
FL56	FILTER_2P_01005	single_brd[20D4]
FL57	FILTER_2P_01005	single_brd[11B7]
FL58	FILTER_2P_01005	single_brd[11C7]
FL59	FILTER_2P_01005	single_brd[17D2]
FL60	FILTER_2P_01005-1	single_brd[17A3]
FL61	FILTER_2P_01005-1	single_brd[19D3]
FL62	FILTER_2P_01005	single_brd[19B3]
FL63	FILTER_2P_01005	single_brd[17D2]
FL64	FILTER_2P_01005-1	single_brd[11A7]
FL65	FILTER_2P_01005-1	single_brd[11A7]
FL66	FILTER_2P_01005	single_brd[17D6]
FL67	FILTER_2P_0201	single_brd[5A5]
FL68	FILTER_2P_01005	single_brd[17B7]
FL69	FILTER_2P_01005	single_brd[17C7]
FL70	FILTER_2P_01005	single_brd[8B3]
FL71	FILTER_2P_01005	single_brd[8C3]
FL72	FILTER_2P_01005	single_brd[8B3]
FL74	FILTER_2P_01005-1	single_brd[8C6]
FL1701_RF	FILTER_3P5_LFE18832MHC1D449	radio_mlb[62D7]single_brd[23]
FL2302	FILTER_2P_01005	single_brd[17C2]
J1	CON_F34ST_D6MT_SM_F-ST-SM	single_brd[11C5]
J1_RF	CON_M54ST_D4MT_SM_M-ST-SM	radio_mlb[44D2]single_brd[23]
J2	CON_M18ST_D4MT_SM_M-ST-SM	single_brd[8C4]
J2_RF	CON_F1ST_COAX_S3MT_SM_F-ST-SM	radio_mlb[44B2]single_brd[23]
J3	CON_M32ST_D4MT_SM_M-ST-SM	single_brd[21C4]
J3_RF	CON_F1ST_COAX_S3MT_SM_F-ST-SM	radio_mlb[44B2]single_brd[23]
J4	CON_M42ST_D2MT_SM_M-ST-SM	single_brd[18A7]
J4_RF	CON_F1ST_COAX_S3MT_SM_F-ST-SM	radio_mlb[62A6]single_brd[23]
J5	CON_M22ST_D4MT_SM_M-ST-SM	single_brd[19C5]
J5_RF	CON_F1ST_COAX_S3MT_SM_F-ST-SM	radio_mlb[62C1]single_brd[23]
J6	CON_F6ST_6MT_BATT_SM_F-ST-SM	single_brd[22D7]
J6_RF	CON_F1ST_COAX_S3MT_SM_F-ST-SM	radio_mlb[62C1]single_brd[23]
J7	CON_M38ST_D4MT_SM_M-ST-SM	single_brd[17C4]
J8_RF	CON_F2ST_COAX_1MT_SM_F-RT-SM	radio_mlb[62D4]single_brd[23]
J9_RF	CON_F2ST_COAX_3MT_SM_F-RT-SM	radio_mlb[62A4]single_brd[23]
J10_RF	CON_F1ST_COAX_S3MT_SM_F-ST-SM	radio_mlb[62B8]single_brd[23]
J11_RF	CON_F6ST_6MT_SIMCARD_SM3_F-ST-SM	radio_mlb[44A6]single_brd[23]
J12_RF	CON_F2ST_COAX_1MT_SM_F-RT-SM	radio_mlb[61C5]single_brd[23]
L1_RF	IND_0806	radio_mlb[45D3]single_brd[23]
L2_RF	IND_0806	radio_mlb[45C3]single_brd[23]
L3	IND_P_VLF302510T-SM	single_brd[14B7]
L3_RF	IND_0806	radio_mlb[45C3]single_brd[23]
L4	IND_TFA252010-SM	single_brd[15C6]
L4_RF	IND_0806	radio_mlb[45D3]single_brd[23]
L5	IND_P_TFA201610G-SM	single_brd[15B6]
L5_RF	IND_TFA252010-SM	radio_mlb[45C3]single_brd[23]
L6	IND_0201	single_brd[17C2]
L6_RF	IND_01005	radio_mlb[62D7]single_brd[23]
L7	IND_0201	single_brd[17C2]
L7_RF	IND_0201	radio_mlb[51C3]single_brd[23]
L8	IND_P_TFA201610G-PSE20161T2R2	single_brd[12C7]
L8_RF	IND_03015	radio_mlb[62D4]single_brd[23]
L9	IND_P_TFA201610G-SM	single_brd[12D4]
L9_RF	IND_0603	radio_mlb[65B6]single_brd[23]
L10	IND_P_TFA201610G-SM	single_brd[12D4]
L10_RF	RES_201	radio_mlb[51B4]single_brd[23]
L11	IND_P_TFA201610G-SM	single_brd[12D4]
L11_RF	RES_201	radio_mlb[51A4]single_brd[23]
L12	IND_P_TFA201610G-SM	single_brd[12D4]
L12_RF	RES_01005	radio_mlb[53D1]single_brd[23]
L13	IND_P_TFA201610G-SM	single_brd[12C4]
L13_RF	IND_0201	radio_mlb[59B3]single_brd[23]
L14	IND_P_TFA201610G-SM	single_brd[12C4]
L14_RF	IND_01005	radio_mlb[56C6]single_brd[23]
L15	IND_P_TFA201610G-SM	single_brd[12C4]
L15_RF	IND_01005	radio_mlb[56C6]single_brd[23]
L16	IND_P_TFA201610G-SM	single_brd[12D2]
L16_RF	IND_0201	radio_mlb[56C3]single_brd[23]
L17	IND_P_TFA201610G-SM	single_brd[12D2]
L17_RF	IND_0201	radio_mlb[56C3]single_brd[23]
L18	IND_TFA201210G-SM	single_brd[12C2]
L18_RF	RES_201	radio_mlb[51B2]single_brd[23]
L19	IND_P_TFA201610G-SM	single_brd[14D6]
L19_RF	IND_01005	radio_mlb[52A4]single_brd[23]
L20	FILTER_4P_TCM0605-1	single_brd[17B3]
L20_RF	IND_01005	radio_mlb[53B7]single_brd[23]
L21	IND_PSB12101T-SM	single_brd[18B3]
L21_RF	IND_MAKK2016-SM	radio_mlb[58B4]single_brd[23]
L22	FILTER_4P_TCM0605-1	single_brd[17B3]
L22_RF	IND_01005	radio_mlb[54C7]single_brd[23]
L23_RF	IND_01005	radio_mlb[54C7]single_brd[23]
L24_RF	RES_201	radio_mlb[54C3]single_brd[23]
L25_RF	IND_0201	radio_mlb[51B3]single_brd[23]

L26_RF	FILTER_4P11_LLP	radio_mlb[51C5]single_brd[23]
L27_RF	IND_0201DS	radio_mlb[51C6]single_brd[23]
L28	IND_0201	single_brd[21C6]
L28_RF	CAP_201	radio_mlb[55B2]single_brd[23]
L29	IND_0201	single_brd[21D6]
L29_RF	RES_01005	radio_mlb[53C7]single_brd[23]
L30	IND_0201	single_brd[21C5]
L30_RF	RES_01005	radio_mlb[53C7]single_brd[23]
L31_RF	IND_0201DS	radio_mlb[51C7]single_brd[23]
L32_RF	IND_0201DS	radio_mlb[51B7]single_brd[23]
L33	FILTER_4P_TCM0605-1	single_brd[21C2]
L33_RF	RES_201	radio_mlb[62B7]single_brd[23]
L34	FILTER_4P_TCM0605-1	single_brd[21C2]
L34_RF	IND_0201DS	radio_mlb[51B6]single_brd[23]
L35	FILTER_4P_TCM0605-1	single_brd[11D2]
L35_RF	IND_01005	radio_mlb[57B7]single_brd[23]
L36	FILTER_4P_TCM0605-1	single_brd[21B2]
L36_RF	IND_01005	radio_mlb[57C7]single_brd[23]
L37	FILTER_4P_TCM0605-1	single_brd[21B2]
L37_RF	IND_0201	radio_mlb[57B3]single_brd[23]
L38	FILTER_4P_TCM0605-1	single_brd[21B2]
L38_RF	IND_0201	radio_mlb[57B3]single_brd[23]
L39	FILTER_4P_TCM0605-1	single_brd[11D2]
L39_RF	IND_0201	radio_mlb[57B3]single_brd[23]
L40_RF	IND_01005	radio_mlb[60B5]single_brd[23]
L41	FILTER_4P_TCM0605-1	single_brd[19C7]
L41_RF	IND_0201	radio_mlb[59C4]single_brd[23]
L42	FILTER_4P_TCM0605-1	single_brd[19C7]
L42_RF	IND_01005	radio_mlb[60B5]single_brd[23]
L43_RF	IND_01005	radio_mlb[60C5]single_brd[23]
L44	FILTER_4P_TCM0605-1	single_brd[19C7]
L44_RF	RES_01005	radio_mlb[53C7]single_brd[23]
L45_RF	RES_01005	radio_mlb[53B7]single_brd[23]
L46_RF	RES_01005	radio_mlb[60B4]single_brd[23]
L47_RF	RES_01005	radio_mlb[60A4]single_brd[23]
L48_RF	IND_0201	radio_mlb[62C4]single_brd[23]
L49_RF	IND_0201	radio_mlb[62B5]single_brd[23]
L50_RF	IND_0201	radio_mlb[62C5]single_brd[23]
L51_RF	IND_0201	radio_mlb[62C3]single_brd[23]
L52_RF	CAP_01005	radio_mlb[60A6]single_brd[23]
L53_RF	IND_01005	radio_mlb[55C5]single_brd[23]
L54_RF	IND_01005	radio_mlb[55C5]single_brd[23]
L55_RF	IND_01005	radio_mlb[51B7]single_brd[23]
L56_RF	IND_01005	radio_mlb[60A7]single_brd[23]
L57_RF	IND_0201	radio_mlb[55C2]single_brd[23]
L58_RF	IND_0201	radio_mlb[51D6]single_brd[23]
L59_RF	IND_01005	radio_mlb[52D4]single_brd[23]
L60_RF	IND_01005	radio_mlb[52C4]single_brd[23]
L61_RF	IND_01005	radio_mlb[52C2]single_brd[23]
L62_RF	IND_0201	radio_mlb[61C6]single_brd[23]
L63_RF	IND_01005	radio_mlb[60B4]single_brd[23]
L64_RF	IND_0201	radio_mlb[51D6]single_brd[23]
L65_RF	IND_01005	radio_mlb[60A6]single_brd[23]
L66_RF	IND_01005	radio_mlb[62D7]single_brd[23]
L67_RF	IND_01005	radio_mlb[62C7]single_brd[23]
L68_RF	IND_01005	radio_mlb[62C7]single_brd[23]
L69_RF	IND_01005	radio_mlb[62D4]single_brd[23]
L70_RF	RES_01005	radio_mlb[53B2]single_brd[23]
L71_RF	RES_01005	radio_mlb[53B2]single_brd[23]
L72_RF	IND_0201	radio_mlb[53A2]single_brd[23]
L73_RF	IND_01005	radio_mlb[53C2]single_brd[23]
L74_RF	IND_01005	radio_mlb[51D4]single_brd[23]
L75_RF	IND_01005	radio_mlb[51C4]single_brd[23]
L76_RF	RES_201	radio_mlb[54C3]single_brd[23]
L77_RF	IND_01005	radio_mlb[60A4]single_brd[23]
L78_RF	IND_0201	radio_mlb[51B3]single_brd[23]
L79_RF	IND_0201	radio_mlb[51D7]single_brd[23]
L80_RF	RES_201	radio_mlb[51A2]single_brd[23]
L81_RF	IND_01005	radio_mlb[52C2]single_brd[23]
L82_RF	IND_01005	radio_mlb[54C6]single_brd[23]
L83_RF	RES_01005	radio_mlb[51A4]single_brd[23]
L90_RF	IND_01005	radio_mlb[51D4]single_brd[23]
L91_RF	IND_01005	radio_mlb[51D4]single_brd[23]
L92_RF	IND_01005	radio_mlb[51C4]single_brd[23]
L93_RF	IND_01005	radio_mlb[51C4]single_brd[23]
L94_RF	CAP_0201	radio_mlb[55C2]single_brd[23]
L95_RF	IND_01005	radio_mlb[51B6]single_brd[23]
L96_RF	IND_01005	radio_mlb[51A6]single_brd[23]
L97_RF	CAP_201	radio_mlb[53A2]single_brd[23]
L98_RF	IND_01005	radio_mlb[52C2]single_brd[23]
L99_RF	IND_P_0201	radio_mlb[53A3]single_brd[23]
L100_RF	IND_01005	radio_mlb[53C4]single_brd[23]
L1400	IND_0603	single_brd[14B3]
L1732_RF	IND_03015	radio_mlb[62D6]single_brd[23]
PP1_RF	PROBEPOINT_SM	radio_mlb[44D7]single_brd[23]
PP2	PROBEPOINT_SM	single_brd[6B8]
PP2_RF	PROBEPOINT_SM	radio_mlb[44D7]single_brd[23]
PP3	PROBEPOINT_SM	single_brd[6A8]
PP3_RF	PROBEPOINT_SM	radio_mlb[44D7]single_brd[23]
PP4_RF	PROBEPOINT_SM	radio_mlb[44B7]single_brd[23]
PP5_RF	PROBEPOINT_SM	radio_mlb[44B7]single_brd[23]
PP6_RF	PROBEPOINT_SM	radio_mlb[44B7]single_brd[23]
PP7	PROBEPOINT_SM	single_brd[18B8]
PP7_RF	PROBEPOINT_SM	radio_mlb[44A7]single_brd[23]
PP8	PROBEPOINT_SM	single_brd[18B8]
PP9	PROBEPOINT_SM	single_brd[18B5]
PP10	PROBEPOINT_SM	single_brd[6A8]
PP11	PROBEPOINT_SM	single_brd[18B1]
PP11_RF	PROBEPOINT_SM	radio_mlb[44D7]single_brd[23]
PP12	PROBEPOINT_SM	single_brd[18B7]
PP13	PROBEPOINT_SM	single_brd[3D1]
PP14_RF	PROBEPOINT_SM	radio_mlb[44C7]single_brd[23]
PP15	PROBEPOINT_SM	single_brd[3D1]
PP15_RF	PROBEPOINT_SM	radio_mlb[44C7]single_brd[23]
PP17	PROBEPOINT_SM	single_brd[6B4]
PP18	PROBEPOINT_SM	single_brd[18B1]
PP18_RF	PROBEPOINT_SM	radio_mlb[44C7]single_brd[23]
PP19	PROBEPOINT_SM	single_brd[6B4]
PP19_RF	PROBEPOINT_SM	radio_mlb[44C7]single_brd[23]
PP20_RF	PROBEPOINT_SM	radio_mlb[44C7]single_brd[23]
PP21_RF	PROBEPOINT_SM	radio_mlb[44C7]single_brd[23]
PP22	PROBEPOINT_SM	single_brd[16C2]
PP22_RF	PROBEPOINT_SM	radio_mlb[44C7]single_brd[23]
PP23	PROBEPOINT_SM	single_brd[2C7]
PP24	PROBEPOINT_SM	single_brd[2B7]
PP40_RF	PROBEPOINT_SM	radio_mlb[44C7]single_brd[23]
PP41_RF	PROBEPOINT_SM	radio_mlb[44C7]single_brd[23]
PP42_RF	PROBEPOINT_SM	radio_mlb[44B7]single_brd[23]
PP43_RF	PROBEPOINT_SM	radio_mlb[44B7]single_brd[23]
PP44_RF	PROBEPOINT_SM	radio_mlb[44B7]single_brd[23]
PP45_RF	PROBEPOINT_SM	radio_mlb[44B7]single_brd[23]
PP46_RF	PROBEPOINT_SM	radio_mlb[44B7]single_brd[23]
PP47_RF	PROBEPOINT_SM	radio_mlb[44B7]single_brd[23]
Q1	TRA_MOSFET_NCHN_3P3_	single_brd[11B4]

	DFN1006H4-3	
Q2	TRA_MOSFET_PCHN_4P5_	single_brd[17A6]
	BGA	
Q4	TRA_MOSFET_PCHN_9P2_	single_brd[12C8]
	BGA	
Q6	TRA_MOSFET_NCHN_3P11	single_brd[18C4]
	_SM	
R1	RES_01005	single_brd[2C6]
R1_RF	RES_01005	radio_mlb[60D6]single_brd[23]
R2	RES_01005	single_brd[18A3]
R2_RF	RES_01005	radio_mlb[60D5]single_brd[23]
R3	RES_01005	single_brd[11A6]
R3_RF	RES_01005	radio_mlb[44A5]single_brd[23]
R4_RF	RES_01005	radio_mlb[48C4]single_brd[23]
R5	RES_01005	single_brd[3C4]
R5_RF	RES_201	radio_mlb[59B4]single_brd[23]
R6	RES_01005	single_brd[2B3]
R6_RF	RES_01005	radio_mlb[47B6]single_brd[23]
R7	RES_01005	single_brd[2C3]
R7_RF	RES_01005	radio_mlb[47A5]single_brd[23]
R8	RES_01005	single_brd[6B2]
R8_RF	RES_01005	radio_mlb[52D2]single_brd[23]
R9	RES_01005	single_brd[11A6]
R9_RF	RES_01005	radio_mlb[47B2]single_brd[23]
R10	RES_01005	single_brd[17C3]
R10_RF	RES_01005	radio_mlb[47D1]single_brd[23]
R11	RES_01005	single_brd[12D4]
R11_RF	RES_201	radio_mlb[62A5]single_brd[23]
R12	RES_01005	single_brd[3A6]
R13_RF	RES_201	radio_mlb[62B7]single_brd[23]
R14_RF	RES_01005	radio_mlb[65B7]single_brd[23]
R15	RES_01005	single_brd[17C7]
R15_RF	RES_01005	radio_mlb[65A7]single_brd[23]
R16	RES_01005	single_brd[3D4]
R16_RF	RES_01005	radio_mlb[65C5]single_brd[23]
R17	RES_01005	single_brd[3D2]
R17_RF	RES_01005	radio_mlb[65C3]single_brd[23]
R18	RES_01005	single_brd[3D2]
R18_RF	RES_01005	radio_mlb[65C3]single_brd[23]
R19	RES_01005	single_brd[3D2]
R19_RF	RES_201	radio_mlb[50D3]single_brd[23]
R20	RES_01005	single_brd[3A3]
R20_RF	RES_01005	radio_mlb[46C8]single_brd[23]
R21	RES_01005	single_brd[3D2]
R21_RF	RES_01005	radio_mlb[46C8]single_brd[23]
R22	RES_01005	single_brd[3A3]
R22_RF	RES_01005	radio_mlb[46B5]single_brd[23]
R23	RES_01005	single_brd[17C3]
R23_RF	RES_01005	radio_mlb[46D4]single_brd[23]
R24_RF	RES_01005	radio_mlb[46D4]single_brd[23]
R25_RF	RES_01005	radio_mlb[46D3]single_brd[23]
R26	RES_01005	single_brd[18C7]
R26_RF	RES_01005	radio_mlb[46D3]single_brd[23]
R27	RES_01005	single_brd[4A8]
R27_RF	RES_01005	radio_mlb[49C4]single_brd[23]
R28	RES_01005	single_brd[4A8]
R28_RF	RES_01005	radio_mlb[49C2]single_brd[23]
R29	RES_01005	single_brd[4A6]
R29_RF	RES_01005	radio_mlb[49C2]single_brd[23]
R30	RES_01005	single_brd[4A6]
R30_RF	RES_01005	radio_mlb[49C2]single_brd[23]
R31	RES_01005	single_brd[4A5]
R32	RES_01005	single_brd[4A5]
R32_RF	RES_01005	radio_mlb[57C5]single_brd[23]
R33	RES_01005	single_brd[4A4]
R33_RF	RES_01005	radio_mlb[58C7]single_brd[23]
R34	RES_01005	single_brd[4A4]
R34_RF	RES_01005	radio_mlb[58C6]single_brd[23]
R35	RES_01005	single_brd[15C5]
R35_RF	RES_01005	radio_mlb[55C3]single_brd[23]
R36	RES_01005	single_brd[18A4]
R36_RF	RES_0201	radio_mlb[54C3]single_brd[23]
R37	RES_01005	single_brd[7C5]
R37_RF	RES_201	radio_mlb[57B3]single_brd[23]
R38	RES_01005	single_brd[7C5]
R38_RF	RES_0201	radio_mlb[54C3]single_brd[23]
R39	RES_01005	single_brd[7C5]
R39_RF	RES_01005	radio_mlb[60C2]single_brd[23]
R40	RES_01005	single_brd[7B5]
R41	RES_01005	single_brd[7C5]
R42	RES_01005	single_brd[7C5]
R43	RES_201	single_brd[16D5]
R43_RF	RES_01005	radio_mlb[65B7]single_brd[23]
R44	RES_201	single_brd[16D5]
R44_RF	RES_01005	radio_mlb[65A7]single_brd[23]
R45	RES_201	single_brd[11B4]
R45_RF	RES_01005	radio_mlb[65B3]single_brd[23]
R46	RES_01005	single_brd[19C3]
R47	RES_01005	single_brd[18A6]
R48	RES_01005	single_brd[18A6]
R49	RES_01005	single_brd[18A6]
R50	RES_01005	single_brd[17C7]
R50_RF	RES_01005	radio_mlb[49C4]single_brd[23]
R51	RES_01005	single_brd[18B7]
R51_RF	RES_01005	radio_mlb[65A6]single_brd[23]
R52	RES_01005	single_brd[3C8]
R52_RF	RES_01005	radio_mlb[65A6]single_brd[23]
R53	RES_01005	single_brd[3B2]
R53_RF	RES_201	radio_mlb[50D8]single_brd[23]
R54	RES_01005	single_brd[3B2]
R55	RES_01005	single_brd[6B5]
R57	THERMISTER_0201	single_brd[13A8]
R58	RES_201	single_brd[17A7]
R60	RES_01005	single_brd[19B3]
R61	RES_01005	single_brd[18A6]
R62	RES_01005	single_brd[18A6]
R64_RF	RES_01005	radio_mlb[53D4]single_brd[23]
R65	RES_01005	single_brd[13C3]
R65_RF	RES_01005	radio_mlb[53B4]single_brd[23]
R67	RES_01005	single_brd[2B7]
R70	RES_01005	single_brd[12D8]
R71	RES_01005	single_brd[2C3]
R72	RES_01005	single_brd[4D8]
R73	RES_01005	single_brd[4D8]
R78	RES_01005	single_brd[6C8]
R79	RES_01005	single_brd[18B5]
R82	RES_01005	single_brd[6C6]
R83	RES_01005	single_brd[16D5]
R84	RES_01005	single_brd[16C5]
R85	RES_01005	single_brd[11B3]
R86	RES_01005	single_brd[18C5]
R87	RES_01005	single_brd[13B3]
R89	RES_01005	single_brd[19C7]
R90	THERMISTER_0201	single_brd[13B8]
R91	RES_01005	single_brd[19C3]
R93	RES_01005	single_brd[3B2]
R94	RES_01005	single_brd[11A7]
R95	RES_01005	single_brd[11A7]
R100	RES_01005	single_brd[10B8]
R102	RES_01005	single_brd[9B3]
R103	RES_01005	single_brd[9B3]
R107	RES_01005	single_brd[17D7]
R108	THERMISTER_0201	single_brd[13C8]
R109	RES_0201	single_brd[13B6]
R110	THERMISTER_0201	single_brd[13B8]
R112	RES_01005	single_brd[13B3]
R113	RES_01005	single_brd[13B3]
R114	RES_01005	single_brd[13B3]
R115	RES_01005	single_brd[12C4]
R116	RES_201	single_brd[13D4]
R117	RES_01005	single_brd[12C4]
R119	RES_01005	single_brd[12B1]
R121	RES_01005	single_brd[18C4]
R122	RES_01005	single_brd[15C4]
R124	RES_01005	single_brd[15C4]
R125	RES_01005	single_brd[11C7]
R126	RES_01005	single_brd[15C3]
R127	RES_01005	single_brd[15C3]
R128	RES_201	single_brd[15C3]
R129	RES_01005	single_brd[15C7]
R130	RES_01005	single_brd[17A3]
R131	RES_01005	single_brd[13C3]
R132	RES_01005	single_brd[11B4]
R133	RES_01005	single_brd[11B4]
R134	RES_01005	single_brd[18B7]
R135	RES_01005	single_brd[17C2]
R136	RES_01005	single_brd[18B7]
R137	RES_01005	single_brd[6C5]
R141	RES_01005	single_brd[21A5]
R143	RES_01005	single_brd[6C5]
R145	RES_01005	single_brd[10C3]
R146	RES_01005	single_brd[3B8]
R147	RES_01005	single_brd[3B5]
R148	RES_01005	single_brd[3B5]
R149	RES_01005	single_brd[3B5]
R150	RES_01005	single_brd[3B4]
R151	RES_01005	single_brd[18D4]
R152	RES_01005	single_brd[19C3]
R153	RES_01005	single_brd[6B8]
R154	RES_01005	single_brd[20C7]
R155	RES_01005	single_brd[13C3]
R156	RES_01005	single_brd[13C3]
R157	RES_01005	single_brd[8D2]
R158	RES_01005	single_brd[16B5]
R159	RES_01005	single_brd[16B4]
R160	RES_01005	single_brd[6C2]
R161	RES_01005	single_brd[6C2]
R162	RES_01005	single_brd[3B8]
R163	RES_01005	single_brd[2B3]
R164	RES_01005	single_brd[2B3]
R165	RES_01005	single_brd[17A3]
R166	RES_01005	single_brd[17A3]
R167	RES_01005	single_brd[17A3]
R168	RES_01005	single_brd[17A3]
R169	RES_01005	single_brd[21C6]
R1400	RES_01005	single_brd[14B2]
R1401	RES_01005	single_brd[14A2]
R1402	RES_01005	single_brd[14A3]
SH1	SHLD_1P_SM	single_brd[22C7]
SH2	SHLD_1P_SM	single_brd[22C7]
SH3	SHLD_1P_SM	single_brd[22B7]
SH4	SHLD_1P_SM	single_brd[22B7]
SP1	SPRING_CLIP_1P_CLIP-	single_brd[22C5]
	SM	
SP1_RF	SMT_PAD_SM-NSP	radio_mlb[62D8]single_brd[23]
SP2_RF	SMT_PAD_SM-NSP	radio_mlb[61B7]single_brd[23]
SW1_RF	SWI_SPDT_BGS12SL6_TS	radio_mlb[59C3]single_brd[23]
	LP6-2	
TP1	TP_TP-P6	single_brd[22D4]
TP1_RF	TP_TP-P6	radio_mlb[62D4]single_brd[23]
TP2	TP_TP-P90	single_brd[22D4]
TP4	TP_TP-P6	single_brd[22C4]
TP5	TP_TP-P6	single_brd[22C4]
TP6	TP_TP-P6	single_brd[22C4]
TP7	TP_TP-P6	single_brd[22C4]
TP8	TP_TP-P6	single_brd[22B4]
TP9	TP_TP-P6	single_brd[22B4]
TP10	TP_TP-P6	single_brd[22B2]
TP12	TP_TP-P90	single_brd[22D4]
TP15	TP_TP-P6	single_brd[22B2]
TP16	TP_TP-P6	single_brd[22B2]
TP17	TP_TP-P6	single_brd[22B2]
TP18	TP_TP-P6	single_brd[22A4]
TP19	TP_TP-P6	single_brd[22A4]
TP20	TP_TP-P6	single_brd[22A4]
TP21	TP_TP-P55	single_brd[22C2]
TP22	TP_TP-P55	single_brd[22C2]
TP23	TP_TP-P55	single_brd[22C2]
TP24	TP_TP-P55	single_brd[22C2]
TP26	TP_TP-P6	single_brd[22C2]
TP27	TP_TP-P6	single_brd[22C2]
TP28	TP_TP-P6	single_brd[22B4]
TP29	TP_TP-P6	single_brd[22B4]
TP32	TP_TP-P6	single_brd[22B2]
U1	H6P_FCMSP	single_brd[3D3]
U1	H6P_FCMSP	single_brd[3D3 3D7]
U1	H6P_FCMSP	single_brd[4D2 4D5 4D7]
U1	H6P_FCMSP	single_brd[5D2 5D4 5D8 5D7]
U1	H6P_FCMSP	single_brd[6C7]
U1	H6P_FCMSP	single_brd[7C3 7C7]
U1_RF	MODEM_MDM9615M_1_BGA	radio_mlb[47D2 47C7 47D4 47B4]single_brd[23]
U1_RF	MODEM_MDM9615M_1_BGA	radio_mlb[48C3 48D7]single_brd[23]
U2	CBTL1608A1_WCSP	single_brd[16D4]
U2_RF	PM8018_WLNSP105_BGA	radio_mlb[45C5]single_brd[23]
U2_RF	PM8018_WLNSP105_BGA	radio_mlb[46B7 46C7 46D3 46B4]single_brd[23]
U3	ISL97751_WLCSP	single_brd[14D5]
U3_RF	WTR1605_SM	radio_mlb[49D4 49B7 49D7 49C7]single_brd[23]
U3_RF	WTR1605_SM	radio_mlb[50B3]single_brd[23]
U4	FLASH_XGX8_60LGA_LGA	single_brd[6C4]
	-12X17	
U4_RF	RF1629_BGA	radio_mlb[53D2]single_brd[23]
U5	74AUP2G3404_SOT1115	single_brd[18A3]
U5_RF	SUPPR_TPD4E101_SON4	radio_mlb[44A3]single_brd[23]
U6	CAT24C08_WLCSP4_WLCS	single_brd[16B5]
	P	
U6_RF	FLASH_MX25U1635E_WLC	radio_mlb[48A7]single_brd[23]
	SP	
U7	AMBER_PMC_FCCSP-0.84	single_brd[12D6]
	MM	
U7	AMBER_PMC_FCCSP-0.84	single_brd[13C2 13C5]
	MM	
U7_RF	RF1112_WLCSP	radio_mlb[62D5]single_brd[23]
U8	ITG3600_SM	single_brd[20C2]
U8_RF	MOD_WIFI_BT_IMPERIAL	radio_mlb[65C5]single_brd[23]
	_LGA60_LGA	
U9	OSCAR_WLCSP52_WLCSP	single_brd[20C6 20D6]
U9_RF	FIL_DIPLEXER_885041_	radio_mlb[62C4]single_brd[23]
	LGA	
U10_RF	SKY77352_LGA	radio_mlb[57C4]single_brd[23]
U11_RF	MAX77270A_WLP	radio_mlb[58C5]single_brd[23]
U12	CUMULUS_BGA63_WLBGA	single_brd[18C6]
U12_RF	FIL_DIPLEXER_HILOBAN	radio_mlb[62C6]single_brd[23]
	D_SM	
U13	TPS22924_CSP	single_brd[21C6]
U13_RF	SWI_SPDT_CXA4011GC_X	radio_mlb[62C2]single_brd[23]
	FLGA	
U14_RF	TSINGTAO_LGA	radio_mlb[60C4]single_brd[23]
U15	SAGE2_1_CSP	single_brd[18D3]
U15_RF	AMP_DUPLEXER_BAND720	radio_mlb[55C4]single_brd[23]
	_LGA30_LGA	
U16	AK8963C_CSP-POP	single_brd[20A6]
U16_RF	FILTER_SAW_1IN4OUT_L	radio_mlb[51A3]single_brd[23]
	GA	
U17	OPEL_WLCSP	single_brd[15B5]
U17_RF	SWI_LMSP3XQQD67_LGA	radio_mlb[59B6]single_brd[23]
U18	BMA282_LGA	single_brd[20B2]
U18_RF	FILTER_4P12_LLP	radio_mlb[62D3]single_brd[23]
U20_RF	AMP_SKY65716_LGA	radio_mlb[61C4]single_brd[23]
U21	CS42L67_WLCSP	single_brd[9C5]
U21	CS42L67_WLCSP	single_brd[10D2 10C6]
U22	CS35L19B_WLCSP	single_brd[15C6]
U22_RF	FIL_BAW_885034_LGA	radio_mlb[60B6]single_brd[23]
U23	LM3534_BGA	single_brd[14B7]
U23_RF	AMP_DUPLEXER_BAND23_	radio_mlb[54C5]single_brd[23]
	LGA30_LGA	
U24_RF	SWI_SPDT_BGS12SL6_TS	radio_mlb[52B6]single_brd[23]
	LP6-2	
U25	74LVC1G34_SOT1226	single_brd[3A3]
U25_RF	AMP_PENTA_BAND_LGA26	radio_mlb[53C6]single_brd[23]
	_LGA	
U26	74LVC1G34_SOT1226	single_brd[3A3]
U26_RF	FIL_DIPLEXER_B38_B40	radio_mlb[51B3]single_brd[23]
	_9P1_LGA	
U27_RF	MOD_LMSWFKJM_LGA	radio_mlb[53B3]single_brd[23]
U58_RF	AMP_DUPLEXER_BAND58_	radio_mlb[56C5]single_brd[23]
	LGA30_LGA	
U1400	LT3460EDC_DFN	single_brd[14B3]
XW1	SHORT10LP1_WITH_ALTS	single_brd[12A7]
	_SHORT-10L-0.1MM-SM	
XW1_RF	SHORT10LP25_WITH_ALT	radio_mlb[46B6]single_brd[23]
	S_SHORT-10L-0.25MM-S	
	M	
XW2	SHORT_SM	single_brd[6D2]
XW2_RF	SHORT10LP25_WITH_ALT	radio_mlb[46B6]single_brd[23]
	S_SHORT-10L-0.25MM-S	
	M	
XW3	SHORT10LP1_WITH_ALTS	single_brd[12C2]
	_SHORT-10L-0.1MM-SM	
XW3_RF	SHORT10LP25_WITH_ALT	radio_mlb[46B6]single_brd[23]
	S_SHORT-10L-0.25MM-S	
	M	
XW4	SHORT10LP1_WITH_ALTS	single_brd[13B6]
	_SHORT-10L-0.1MM-SM	
XW4_RF	SHORT10LP25_WITH_ALT	radio_mlb[46B6]single_brd[23]
	S_SHORT-10L-0.25MM-S	
	M	
XW5	SHORT10LP1_WITH_ALTS	single_brd[8C3]
	_SHORT-10L-0.1MM-SM	
XW6	SHORT10LP1_WITH_ALTS	single_brd[13B6]
	_SHORT-10L-0.1MM-SM	
XW6_RF	SHORT10LP25_WITH_ALT	radio_mlb[58B4]single_brd[23]
	S_SHORT-10L-0.25MM-S	
	M	
XW7	SHORT_SM	single_brd[11C3]
XW8	SHORT10LP1_WITH_ALTS	single_brd[13B6]
	_SHORT-10L-0.1MM-SM	
XW8_RF	SHORT_SHORT-01005	radio_mlb[65C7]single_brd[23]
XW9	SHORT10LP1_WITH_ALTS	single_brd[13B6]
	_SHORT-10L-0.1MM-SM	
XW9_RF	SHORT_LAYER_9_SHORT-	radio_mlb[65D6]single_brd[23]
	L9-SM	
XW10	SHORT_SM	single_brd[12B1]
XW10_RF	SHORT10LP1_WITH_ALTS	radio_mlb[46A4]single_brd[23]
	_SHORT-10L-0.1MM-SM	
XW11	SHORT10LP1_WITH_ALTS	single_brd[13B6]
	_SHORT-10L-0.1MM-SM	
XW11_RF	SHORT10LP25_WITH_ALT	radio_mlb[58B4]single_brd[23]
	S_SHORT-10L-0.25MM-S	
	M	
XW12	SHORT10LP25_WITH_ALT	single_brd[22D7]
	S_SHORT-10L-0.25MM-S	
	M	
XW12_RF	SHORT10LP1_WITH_ALTS	radio_mlb[44A7]single_brd[23]
	_SHORT-10L-0.1MM-SM	
XW13	SHORT_SM	single_brd[17D4]
XW13_RF	SHORT10LP1_WITH_ALTS	radio_mlb[44A7]single_brd[23]
	_SHORT-10L-0.1MM-SM	
XW14	SHORT10LP1_WITH_ALTS	single_brd[13B6]
	_SHORT-10L-0.1MM-SM	
XW14_RF	SHORT10LP1_WITH_ALTS	radio_mlb[44A7]single_brd[23]
	_SHORT-10L-0.1MM-SM	
XW15	SHORT10LP1_WITH_ALTS	single_brd[13B6]
	_SHORT-10L-0.1MM-SM	
XW15_RF	SHORT10LP1_WITH_ALTS	radio_mlb[44A7]single_brd[23]
	_SHORT-10L-0.1MM-SM	
XW16_RF	SHORT10LP25_WITH_ALT	radio_mlb[46A6]single_brd[23]
	S_SHORT-10L-0.25MM-S	
	M	
XW17_RF	SHORT10LP1_WITH_ALTS	radio_mlb[45C5]single_brd[23]
	_SHORT-10L-0.1MM-SM	
XW18	SHORT10LP1_WITH_ALTS	single_brd[12D2]
	_SHORT-10L-0.1MM-SM	
XW20	SHORT10LP1_WITH_ALTS	single_brd[12D2]
	_SHORT-10L-0.1MM-SM	
XW20_RF	SHORT_LAYER_9_SHORT-	radio_mlb[65D6]single_brd[23]
	L9-SM	
XW21	SHORT_SM	single_brd[17B5]
XW22	SHORT_SM	single_brd[17B5]
XW25	SHORT10LP1_WITH_ALTS	single_brd[17B6]
	_SHORT-10L-0.1MM-SM	
XW28	SHORT_SM	single_brd[13B6]
XW29	SHORT_SM	single_brd[13B6]
XW31	SHORT_SM	single_brd[21C4]
XW33	SHORT10LP1_WITH_ALTS	single_brd[13B6]
	_SHORT-10L-0.1MM-SM	
XW34	SHORT_SM	single_brd[15A5]
XW35	SHORT_SM	single_brd[15D6]
XW36	SHORT_SM	single_brd[18D5]
XW37	SHORT_SM	single_brd[18B5]
XW39	SHORT_SM	single_brd[15C3]
XW40	SHORT_SM	single_brd[15C3]
XW41	SHORT10LP1_WITH_ALTS	single_brd[8C3]
	_SHORT-10L-0.1MM-SM	
XW42	SHORT10LP1_WITH_ALTS	single_brd[11C3]
	_SHORT-10L-0.1MM-SM	
XW43	SHORT10LP1_WITH_ALTS	single_brd[10D7]
	_SHORT-10L-0.1MM-SM	
XW44	SHORT10LP1_WITH_ALTS	single_brd[2C1]
	_SHORT-10L-0.1MM-SM	
XW45	SHORT10LP1_WITH_ALTS	single_brd[17B6]
	_SHORT-10L-0.1MM-SM	
XW46	SHORT10LP1_WITH_ALTS	single_brd[11C2]
	_SHORT-10L-0.1MM-SM	
XW47_RF	SHORT10LP25_WITH_ALT	radio_mlb[58C5]single_brd[23]
	S_SHORT-10L-0.25MM-S	
	M	
XW48	SHORT10LP1_WITH_ALTS	single_brd[10B5]
	_SHORT-10L-0.1MM-SM	
XW49	SHORT_SM	single_brd[15A5]
Y1	CRYSTAL_4PIN1_1.60X1	single_brd[2C2]
	.20MM-SM	
Y1_RF	CRYSTAL_4PIN2_2.0X1.	radio_mlb[46B4]single_brd[23]
	60MM	
Y2	CRYSTAL_2012	single_brd[12A7]

```
Title:       Basenet Report
Design:      single_brd
Date:        Sep 7 13:12:06 2012

Base nets and synonyms for
single_brd_lib.SINGLE_BRD(@single_brd_lib.single_brd(sch_1))
Base Signal          Synonyms                              Location([Zone][dir])

45_AMBER_VSS_RTC     45_AMBER_VSS_RTC -                    12A7
                     @single_brd_lib.SINGLE_BRD
45_AP_BI_NAND_ANC0_D 45_AP_BI_NAND_ANC0_DQS -              6A7 6B8 6C2
QS                   @single_brd_lib.SINGLE_BRD
45_AP_BI_NAND_ANC1_D 45_AP_BI_NAND_ANC1_DQS -              6B3 6B6
QS                   @single_brd_lib.SINGLE_BRD
45_AP_PPN0_ZQ        45_AP_PPN0_ZQ -                       6B8
                     @single_brd_lib.SINGLE_BRD
45_AP_PPN1_ZQ        45_AP_PPN1_ZQ -                       6B6
                     @single_brd_lib.SINGLE_BRD
45_AP_TO_BB_I2S1_BCL 45_AP_TO_BB_I2S1_BCLK -               3C4 23C6
K                    @single_brd_lib.SINGLE_BRD
                     BB_I2S_CLK -                          44B6 44C8 48B4
                     @single_brd_lib.RADIO_MLB(i624_page
                     23)
45_AP_TO_BT_I2S3_BCL 45_AP_TO_BT_I2S3_BCLK -               3C4 23B6
K                    @single_brd_lib.SINGLE_BRD
                     BT_PCM_CLK -                          44B8 65B3
                     @single_brd_lib.RADIO_MLB(i624_page
                     23)
45_AP_TO_CODEC_ASP_I 45_AP_TO_CODEC_ASP_I2S0_BCLK -        3D4 10D3
2S0_BCLK             @single_brd_lib.SINGLE_BRD
45_AP_TO_CODEC_I2S_M 45_AP_TO_CODEC_I2S_MCLK -             3D5 10D3
CLK                  @single_brd_lib.SINGLE_BRD
45_AP_TO_CODEC_I2S_M 45_AP_TO_CODEC_I2S_MCLK_R -           3D4
CLK_R                @single_brd_lib.SINGLE_BRD
45_AP_TO_CODEC_VSP_I 45_AP_TO_CODEC_VSP_I2S4_BCLK -        3C4 10C3
2S4_BCLK             @single_brd_lib.SINGLE_BRD
45_AP_TO_CODEC_XSP_I 45_AP_TO_CODEC_XSP_I2S2_BCLK -        3C4 10C3 15C6
2S2_BCLK             @single_brd_lib.SINGLE_BRD
45_AP_TO_FCAM_CLK    45_AP_TO_FCAM_CLK -                   7B4 11D8
                     @single_brd_lib.SINGLE_BRD
45_AP_TO_FCAM_CLK_CO 45_AP_TO_FCAM_CLK_CONN -              11D6
NN                   @single_brd_lib.SINGLE_BRD
45_AP_TO_FCAM_CLK_R  45_AP_TO_FCAM_CLK_R -                 7C6
                     @single_brd_lib.SINGLE_BRD
45_AP_TO_NAND_ANC0_R 45_AP_TO_NAND_ANC0_RE_L -             6A7 6B8 6C2
E_L                  @single_brd_lib.SINGLE_BRD
45_AP_TO_NAND_ANC1_R 45_AP_TO_NAND_ANC1_RE_L -             6B3 6B6
E_L                  @single_brd_lib.SINGLE_BRD
45_AP_TO_PMU_DWI_CLK 45_AP_TO_PMU_DWI_CLK -                3C2 13B7 14B6
                     @single_brd_lib.SINGLE_BRD
45_AP_TO_PMU_DWI_CLK 45_AP_TO_PMU_DWI_CLK_XW -             13B6
_XW                  @single_brd_lib.SINGLE_BRD
45_AP_TO_PMU_DWI_DO  45_AP_TO_PMU_DWI_DO -                 3C2 13B7 14B6
                     @single_brd_lib.SINGLE_BRD
45_AP_TO_PMU_DWI_DO_ 45_AP_TO_PMU_DWI_DO_XW -              13B6
XW                   @single_brd_lib.SINGLE_BRD
45_AP_TO_RCAM_CLK    45_AP_TO_RCAM_CLK -                   7C4 21A7
                     @single_brd_lib.SINGLE_BRD
45_AP_TO_RCAM_CLK_CO 45_AP_TO_RCAM_CLK_CONN -              21B4
NN                   @single_brd_lib.SINGLE_BRD
45_AP_TO_RCAM_CLK_R  45_AP_TO_RCAM_CLK_R -                 7C6
                     @single_brd_lib.SINGLE_BRD
45_AP_TO_SPKAMP_I2S2 45_AP_TO_SPKAMP_I2S2_MCLK -           3C5 15C6
_MCLK                @single_brd_lib.SINGLE_BRD
45_AP_TO_SPKAMP_I2S2 45_AP_TO_SPKAMP_I2S2_MCLK_R -         3C4
_MCLK_R              @single_brd_lib.SINGLE_BRD
45_AP_TO_TOUCH_CLK32 45_AP_TO_TOUCH_CLK32K_RESET_L -       3C5 18B8
K_RESET_L            @single_brd_lib.SINGLE_BRD
45_BUCK0_FB          45_BUCK0_FB -                         4A3 12D4
                     @single_brd_lib.SINGLE_BRD
45_BUCK1_FB          45_BUCK1_FB -                         4A1 12C4
                     @single_brd_lib.SINGLE_BRD
45_BUCK2_FB          45_BUCK2_FB -                         4A5 12C4
                     @single_brd_lib.SINGLE_BRD
45_BUCK3_FB          45_BUCK3_FB -                         12B5
                     @single_brd_lib.SINGLE_BRD
45_BUCK4_FB          45_BUCK4_FB -                         12B5
                     @single_brd_lib.SINGLE_BRD
45_BUCK5_FB          45_BUCK5_FB -                         12B5
                     @single_brd_lib.SINGLE_BRD
45_CAM_AVDD_FB       45_CAM_AVDD_FB -                      11C2 12A2
                     @single_brd_lib.SINGLE_BRD
45_DDR0_VREF_CA      45_DDR0_VREF_CA -                     4A7 4D8
                     @single_brd_lib.SINGLE_BRD
45_DDR0_VREF_DQ      45_DDR0_VREF_DQ -                     4A5 4D8
                     @single_brd_lib.SINGLE_BRD
45_DDR0_ZQ           45_DDR0_ZQ -                          4D8
                     @single_brd_lib.SINGLE_BRD
45_DDR1_VREF_CA      45_DDR1_VREF_CA -                     4A6 4D8
                     @single_brd_lib.SINGLE_BRD
45_DDR1_VREF_DQ      45_DDR1_VREF_DQ -                     4A4 4D8
                     @single_brd_lib.SINGLE_BRD
45_DDR1_ZQ           45_DDR1_ZQ -                          4D8
                     @single_brd_lib.SINGLE_BRD
45_NAND_PPN_ZQ       45_NAND_PPN_ZQ -                      6B3
                     @single_brd_lib.SINGLE_BRD
45_PMU_IREF          45_PMU_IREF -                         13C4
                     @single_brd_lib.SINGLE_BRD
45_PMU_TCAL          45_PMU_TCAL -                         13B6
                     @single_brd_lib.SINGLE_BRD
45_PMU_TO_OSCAR_CLK3 45_PMU_TO_OSCAR_CLK32K -              13B4 20C5
2K                   @single_brd_lib.SINGLE_BRD
45_PMU_TO_TOUCH_CLK3 45_PMU_TO_TOUCH_CLK32K_RESET_L -      13B4 18B8
2K_RESET_L           @single_brd_lib.SINGLE_BRD
45_PMU_TO_WLAN_CLK32 45_PMU_TO_WLAN_CLK32K -               13B4 13C6 23D6
K                    @single_brd_lib.SINGLE_BRD
                     CLK32K_AP -                           44C8 44D6 65C7
                     @single_brd_lib.RADIO_MLB(i624_page
                     23)
45_PMU_TO_XTAL_OSC32 45_PMU_TO_XTAL_OSC32 -                12A7
                     @single_brd_lib.SINGLE_BRD
45_PMU_VPUMP         45_PMU_VPUMP -                        12A5
                     @single_brd_lib.SINGLE_BRD
45_PROX_TO_CUMULUS_R 45_PROX_TO_CUMULUS_RX -               11C8 18C8
X                    @single_brd_lib.SINGLE_BRD
45_PROX_TO_CUMULUS_R 45_PROX_TO_CUMULUS_RX_CONN -          11C6
X_CONN               @single_brd_lib.SINGLE_BRD
45_PROX_TO_CUMULUS_R 45_PROX_TO_CUMULUS_RX_FILT -          18C8
X_FILT               @single_brd_lib.SINGLE_BRD
45_PROX_TO_CUMULUS_R 45_PROX_TO_CUMULUS_RX_IN -            18B7
X_IN                 @single_brd_lib.SINGLE_BRD
45_TOUCH_CLK32K_RESE 45_TOUCH_CLK32K_RESET_L -             18B7
T_L                  @single_brd_lib.SINGLE_BRD
45_XTAL_24M_GND      45_XTAL_24M_GND -                     2C2
```

```
                     @single_brd_lib.SINGLE_BRD
45_XTAL_24M_I        45_XTAL_24M_I -                       2C4
                     @single_brd_lib.SINGLE_BRD
45_XTAL_24M_O        45_XTAL_24M_O -                       2C4
                     @single_brd_lib.SINGLE_BRD
45_XTAL_24M_O_R      45_XTAL_24M_O_R -                     2C2
                     @single_brd_lib.SINGLE_BRD
45_XTAL_TO_PMU_OSC32 45_XTAL_TO_PMU_OSC32 -                12A7
                     @single_brd_lib.SINGLE_BRD
50_AP_BI_BB_HSIC1_DA 50_AP_BI_BB_HSIC1_DATA -              2B6 23B6
TA                   @single_brd_lib.SINGLE_BRD
                     50_HSIC_BB_DATA -                     44B1 44B6 44C8 47B3
                     @single_brd_lib.RADIO_MLB(i624_page
                     23)
50_AP_BI_BB_HSIC1_ST 50_AP_BI_BB_HSIC1_STB -               2B6 23B6
B                    @single_brd_lib.SINGLE_BRD
                     50_HSIC_BB_STROBE -                   44B1 44B6 44C8 47B3
                     @single_brd_lib.RADIO_MLB(i624_page
                     23)
50_AP_BI_WLAN_HSIC2_ 50_AP_BI_WLAN_HSIC2_DATA -            2B6 23B6
DATA                 @single_brd_lib.SINGLE_BRD
                     50_HSIC_WLAN_DATA -                   44B6 44C8 65B6
                     @single_brd_lib.RADIO_MLB(i624_page
                     23)
50_AP_BI_WLAN_HSIC2_ 50_AP_BI_WLAN_HSIC2_STB -             2B6 23B6
STB                  @single_brd_lib.SINGLE_BRD
                     50_HSIC_WLAN_STROBE -                 44B6 44C8 65B6
                     @single_brd_lib.RADIO_MLB(i624_page
                     23)
90_AP_BI_LCM_MIPI_DA 90_AP_BI_LCM_MIPI_DATA0_CONN_N -      19C6
TA0_CONN_N           @single_brd_lib.SINGLE_BRD
90_AP_BI_LCM_MIPI_DA 90_AP_BI_LCM_MIPI_DATA0_CONN_P -      19C6
TA0_CONN_P           @single_brd_lib.SINGLE_BRD
90_AP_BI_LCM_MIPI_DA 90_AP_BI_LCM_MIPI_DATA0_N -           7B8 19C7
TA0_N                @single_brd_lib.SINGLE_BRD
90_AP_BI_LCM_MIPI_DA 90_AP_BI_LCM_MIPI_DATA0_P -           7B8 19C7
TA0_P                @single_brd_lib.SINGLE_BRD
90_AP_BI_TRISTAR_USB 90_AP_BI_TRISTAR_USB0_H6P_N -         2B4
0_H6P_N              @single_brd_lib.SINGLE_BRD
90_AP_BI_TRISTAR_USB 90_AP_BI_TRISTAR_USB0_H6P_P -         2B4
0_H6P_P              @single_brd_lib.SINGLE_BRD
90_AP_BI_TRISTAR_USB 90_AP_BI_TRISTAR_USB0_N -             2B2 16C4
0_N                  @single_brd_lib.SINGLE_BRD
90_AP_BI_TRISTAR_USB 90_AP_BI_TRISTAR_USB0_P -             2B2 16C4
0_P                  @single_brd_lib.SINGLE_BRD
90_AP_TO_LCM_MIPI_CL 90_AP_TO_LCM_MIPI_CLK_CONN_N -        19C6
K_CONN_N             @single_brd_lib.SINGLE_BRD
90_AP_TO_LCM_MIPI_CL 90_AP_TO_LCM_MIPI_CLK_CONN_P -        19C6
K_CONN_P             @single_brd_lib.SINGLE_BRD
90_AP_TO_LCM_MIPI_CL 90_AP_TO_LCM_MIPI_CLK_N -             7B8 19C7
K_N                  @single_brd_lib.SINGLE_BRD
90_AP_TO_LCM_MIPI_CL 90_AP_TO_LCM_MIPI_CLK_P -             7B8 19C7
K_P                  @single_brd_lib.SINGLE_BRD
90_AP_TO_LCM_MIPI_DA 90_AP_TO_LCM_MIPI_DATA1_CONN_N -      19C6
TA1_CONN_N           @single_brd_lib.SINGLE_BRD
90_AP_TO_LCM_MIPI_DA 90_AP_TO_LCM_MIPI_DATA1_CONN_P -      19C6
TA1_CONN_P           @single_brd_lib.SINGLE_BRD
90_AP_TO_LCM_MIPI_DA 90_AP_TO_LCM_MIPI_DATA1_N -           7B8 19C7
TA1_N                @single_brd_lib.SINGLE_BRD
90_AP_TO_LCM_MIPI_DA 90_AP_TO_LCM_MIPI_DATA1_P -           7B8 19C7
TA1_P                @single_brd_lib.SINGLE_BRD
90_CODEC_BI_TRISTAR_ 90_CODEC_BI_TRISTAR_MIKEYBUS_DIG_N    16D5
MIKEYBUS_DIG_N       - @single_brd_lib.SINGLE_BRD
90_CODEC_BI_TRISTAR_ 90_CODEC_BI_TRISTAR_MIKEYBUS_DIG_P    16D5
MIKEYBUS_DIG_P       - @single_brd_lib.SINGLE_BRD
90_CODEC_BI_TRISTAR_ 90_CODEC_BI_TRISTAR_MIKEYBUS_L67_N    9B4
MIKEYBUS_L67_N       - @single_brd_lib.SINGLE_BRD
90_CODEC_BI_TRISTAR_ 90_CODEC_BI_TRISTAR_MIKEYBUS_L67_P    9B4
MIKEYBUS_L67_P       - @single_brd_lib.SINGLE_BRD
90_CODEC_BI_TRISTAR_ 90_CODEC_BI_TRISTAR_MIKEYBUS_N -      9B1 16D6
MIKEYBUS_N           @single_brd_lib.SINGLE_BRD
90_CODEC_BI_TRISTAR_ 90_CODEC_BI_TRISTAR_MIKEYBUS_P -      9B1 16D6
MIKEYBUS_P           @single_brd_lib.SINGLE_BRD
90_FCAM_TO_AP_MIPI_C 90_FCAM_TO_AP_MIPI_CLK_CONN_N -       11C4
LK_CONN_N            @single_brd_lib.SINGLE_BRD
90_FCAM_TO_AP_MIPI_C 90_FCAM_TO_AP_MIPI_CLK_CONN_P -       11C4
LK_CONN_P            @single_brd_lib.SINGLE_BRD
90_FCAM_TO_AP_MIPI_C 90_FCAM_TO_AP_MIPI_CLK_N -            7B5 11D1
LK_N                 @single_brd_lib.SINGLE_BRD
90_FCAM_TO_AP_MIPI_C 90_FCAM_TO_AP_MIPI_CLK_P -            7B5 11D1
LK_P                 @single_brd_lib.SINGLE_BRD
90_FCAM_TO_AP_MIPI_D 90_FCAM_TO_AP_MIPI_DATA0_CONN_N -     11C4
ATA0_CONN_N          @single_brd_lib.SINGLE_BRD
90_FCAM_TO_AP_MIPI_D 90_FCAM_TO_AP_MIPI_DATA0_CONN_P -     11C4
ATA0_CONN_P          @single_brd_lib.SINGLE_BRD
90_FCAM_TO_AP_MIPI_D 90_FCAM_TO_AP_MIPI_DATA0_N -          7B5 11D1
ATA0_N               @single_brd_lib.SINGLE_BRD
90_FCAM_TO_AP_MIPI_D 90_FCAM_TO_AP_MIPI_DATA0_P -          7B5 11D1
ATA0_P               @single_brd_lib.SINGLE_BRD
90_RCAM_TO_AP_MIPI_C 90_RCAM_TO_AP_MIPI_CLK_CONN_N -       21B3
LK_CONN_N            @single_brd_lib.SINGLE_BRD
90_RCAM_TO_AP_MIPI_C 90_RCAM_TO_AP_MIPI_CLK_CONN_P -       21B3
LK_CONN_P            @single_brd_lib.SINGLE_BRD
90_RCAM_TO_AP_MIPI_C 90_RCAM_TO_AP_MIPI_CLK_N -            7C8 21B1
LK_N                 @single_brd_lib.SINGLE_BRD
90_RCAM_TO_AP_MIPI_C 90_RCAM_TO_AP_MIPI_CLK_P -            7C8 21B1
LK_P                 @single_brd_lib.SINGLE_BRD
90_RCAM_TO_AP_MIPI_D 90_RCAM_TO_AP_MIPI_DATA0_CONN_N -     21B3
ATA0_CONN_N          @single_brd_lib.SINGLE_BRD
90_RCAM_TO_AP_MIPI_D 90_RCAM_TO_AP_MIPI_DATA0_CONN_P -     21B3
ATA0_CONN_P          @single_brd_lib.SINGLE_BRD
90_RCAM_TO_AP_MIPI_D 90_RCAM_TO_AP_MIPI_DATA0_N -          7C8 21B1
ATA0_N               @single_brd_lib.SINGLE_BRD
90_RCAM_TO_AP_MIPI_D 90_RCAM_TO_AP_MIPI_DATA0_P -          7C8 21B1
ATA0_P               @single_brd_lib.SINGLE_BRD
90_RCAM_TO_AP_MIPI_D 90_RCAM_TO_AP_MIPI_DATA1_CONN_N -     21B3
ATA1_CONN_N          @single_brd_lib.SINGLE_BRD
90_RCAM_TO_AP_MIPI_D 90_RCAM_TO_AP_MIPI_DATA1_CONN_P -     21B3
ATA1_CONN_P          @single_brd_lib.SINGLE_BRD
90_RCAM_TO_AP_MIPI_D 90_RCAM_TO_AP_MIPI_DATA1_N -          7C8 21B1
ATA1_N               @single_brd_lib.SINGLE_BRD
90_RCAM_TO_AP_MIPI_D 90_RCAM_TO_AP_MIPI_DATA1_P -          7C8 21B1
ATA1_P               @single_brd_lib.SINGLE_BRD
90_RCAM_TO_AP_MIPI_D 90_RCAM_TO_AP_MIPI_DATA2_CONN_N -     21C3
ATA2_CONN_N          @single_brd_lib.SINGLE_BRD
90_RCAM_TO_AP_MIPI_D 90_RCAM_TO_AP_MIPI_DATA2_CONN_P -     21C3
ATA2_CONN_P          @single_brd_lib.SINGLE_BRD
90_RCAM_TO_AP_MIPI_D 90_RCAM_TO_AP_MIPI_DATA2_N -          7C8 21C1
ATA2_N               @single_brd_lib.SINGLE_BRD
90_RCAM_TO_AP_MIPI_D 90_RCAM_TO_AP_MIPI_DATA2_P -          7C8 21C1
ATA2_P               @single_brd_lib.SINGLE_BRD
90_RCAM_TO_AP_MIPI_D 90_RCAM_TO_AP_MIPI_DATA3_CONN_N -     21C3
ATA3_CONN_N          @single_brd_lib.SINGLE_BRD
90_RCAM_TO_AP_MIPI_D 90_RCAM_TO_AP_MIPI_DATA3_CONN_P -     21C3
```

```
ATA3_CONN_P          @single_brd_lib.SINGLE_BRD
90_RCAM_TO_AP_MIPI_D 90_RCAM_TO_AP_MIPI_DATA3_N -          7C8 21C1
ATA3_N               @single_brd_lib.SINGLE_BRD
90_RCAM_TO_AP_MIPI_D 90_RCAM_TO_AP_MIPI_DATA3_P -          7C8 21C1
ATA3_P               @single_brd_lib.SINGLE_BRD
90_TRISTAR_BI_BB_USB 90_TRISTAR_BI_BB_USB_N -              16C4 23C6
_N                   @single_brd_lib.SINGLE_BRD
                     90_BB_USB_D_N -                       44C3 44C8 47A5
                     @single_brd_lib.RADIO_MLB(i624_page
                     23)
90_TRISTAR_BI_BB_USB 90_TRISTAR_BI_BB_USB_P -              16D4 23C6
_P                   @single_brd_lib.SINGLE_BRD
                     90_BB_USB_D_P -                       44C3 44C8 47A5
                     @single_brd_lib.RADIO_MLB(i624_page
                     23)
90_TRISTAR_BI_E75_PA 90_TRISTAR_BI_E75_PAIR1_CONN_N -      17A4 17C4
IR1_CONN_N           @single_brd_lib.SINGLE_BRD
90_TRISTAR_BI_E75_PA 90_TRISTAR_BI_E75_PAIR1_CONN_P -      17A4 17C4
IR1_CONN_P           @single_brd_lib.SINGLE_BRD
90_TRISTAR_BI_E75_PA 90_TRISTAR_BI_E75_PAIR1_N -           16C2 17A3 17B1 22C3
IR1_N                @single_brd_lib.SINGLE_BRD
90_TRISTAR_BI_E75_PA 90_TRISTAR_BI_E75_PAIR1_P -           16C2 17A3 17B1 22C3
IR1_P                @single_brd_lib.SINGLE_BRD
90_TRISTAR_BI_E75_PA 90_TRISTAR_BI_E75_PAIR2_CONN_N -      17A4 17C3
IR2_CONN_N           @single_brd_lib.SINGLE_BRD
90_TRISTAR_BI_E75_PA 90_TRISTAR_BI_E75_PAIR2_CONN_P -      17A4 17B3
IR2_CONN_P           @single_brd_lib.SINGLE_BRD
90_TRISTAR_BI_E75_PA 90_TRISTAR_BI_E75_PAIR2_N -           16C2 17A3 17B1 22C3
IR2_N                @single_brd_lib.SINGLE_BRD
90_TRISTAR_BI_E75_PA 90_TRISTAR_BI_E75_PAIR2_P -           16C2 17A3 17B1 22C3
IR2_P                @single_brd_lib.SINGLE_BRD
ACCEL_TO_OSCAR_INT1  ACCEL_TO_OSCAR_INT1 -                 20A3 20D7
                     @single_brd_lib.SINGLE_BRD
ACCEL_TO_OSCAR_INT2  ACCEL_TO_OSCAR_INT2 -                 20A3 20C7
                     @single_brd_lib.SINGLE_BRD
ALS_TO_AP_INT_CONN_L ALS_TO_AP_INT_CONN_L -                11C5
                     @single_brd_lib.SINGLE_BRD
ALS_TO_AP_INT_L      ALS_TO_AP_INT_L -                     3C5 11B7
                     @single_brd_lib.SINGLE_BRD
ANTENNA_PAC_TO_BB_SP ANTENNA_PAC_TO_BB_SPI_MISO -          23A6
I_MISO               @single_brd_lib.SINGLE_BRD
                     PAC_TO_BB_SPI_DATA_MISO -             44B8 48C4 62D7
                     @single_brd_lib.RADIO_MLB(i624_page
                     23)
AP_BI_BATTERY_SWI    AP_BI_BATTERY_SWI -                   3B5 13B4 22D5
                     @single_brd_lib.SINGLE_BRD
AP_BI_BATTERY_SWI_CO AP_BI_BATTERY_SWI_CONN -              22D7 22D8
NN                   @single_brd_lib.SINGLE_BRD
AP_BI_EEPROM_I2C_SDA AP_BI_EEPROM_I2C_SDA -                3C2 16B4
                     @single_brd_lib.SINGLE_BRD
AP_BI_FCAM_I2C_SDA   AP_BI_FCAM_I2C_SDA -                  7C4 11C7
                     @single_brd_lib.SINGLE_BRD
AP_BI_FCAM_SDA_CONN  AP_BI_FCAM_SDA_CONN -                 11D6
                     @single_brd_lib.SINGLE_BRD
AP_BI_I2C0_SDA       AP_BI_I2C0_SDA -                      3D1 13B6 14B7 14C6 15C6
                     @single_brd_lib.SINGLE_BRD            16C2
AP_BI_I2C1_SDA       AP_BI_I2C1_SDA -                      3D1 11B8
                     @single_brd_lib.SINGLE_BRD
AP_BI_I2C1_SDA_ALS_C AP_BI_I2C1_SDA_ALS_CONN -             11C5
ONN                  @single_brd_lib.SINGLE_BRD
AP_BI_NAND_ANC0_IO<0 AP_BI_NAND_ANC0_IO<0> -               6C5 6C8
>                    @single_brd_lib.SINGLE_BRD
AP_BI_NAND_ANC0_IO<1 AP_BI_NAND_ANC0_IO<1> -               6C5 6C8
>                    @single_brd_lib.SINGLE_BRD
AP_BI_NAND_ANC0_IO<2 AP_BI_NAND_ANC0_IO<2> -               6C5 6C8
>                    @single_brd_lib.SINGLE_BRD
AP_BI_NAND_ANC0_IO<3 AP_BI_NAND_ANC0_IO<3> -               6C5 6C8
>                    @single_brd_lib.SINGLE_BRD
AP_BI_NAND_ANC0_IO<4 AP_BI_NAND_ANC0_IO<4> -               6C5 6C8
>                    @single_brd_lib.SINGLE_BRD
AP_BI_NAND_ANC0_IO<5 AP_BI_NAND_ANC0_IO<5> -               6C5 6C8
>                    @single_brd_lib.SINGLE_BRD
AP_BI_NAND_ANC0_IO<6 AP_BI_NAND_ANC0_IO<6> -               6B7 6C5 6C8
>                    @single_brd_lib.SINGLE_BRD
AP_BI_NAND_ANC0_IO<7 AP_BI_NAND_ANC0_IO<7> -               6C5 6C8
>                    @single_brd_lib.SINGLE_BRD
AP_BI_NAND_ANC1_IO<0 AP_BI_NAND_ANC1_IO<0> -               6C5
>                    @single_brd_lib.SINGLE_BRD
AP_BI_NAND_ANC1_IO<1 AP_BI_NAND_ANC1_IO<1> -               6C5
>                    @single_brd_lib.SINGLE_BRD
AP_BI_NAND_ANC1_IO<2 AP_BI_NAND_ANC1_IO<2> -               6C5
>                    @single_brd_lib.SINGLE_BRD
AP_BI_NAND_ANC1_IO<3 AP_BI_NAND_ANC1_IO<3> -               6C5
>                    @single_brd_lib.SINGLE_BRD
AP_BI_NAND_ANC1_IO<4 AP_BI_NAND_ANC1_IO<4> -               6C5
>                    @single_brd_lib.SINGLE_BRD
AP_BI_NAND_ANC1_IO<5 AP_BI_NAND_ANC1_IO<5> -               6C5
>                    @single_brd_lib.SINGLE_BRD
AP_BI_NAND_ANC1_IO<6 AP_BI_NAND_ANC1_IO<6> -               6C5
>                    @single_brd_lib.SINGLE_BRD
AP_BI_NAND_ANC1_IO<7 AP_BI_NAND_ANC1_IO<7> -               6C5
>                    @single_brd_lib.SINGLE_BRD
AP_BI_OSCAR_SWDIO_1V AP_BI_OSCAR_SWDIO_1V8 -               3C2 20C5
8                    @single_brd_lib.SINGLE_BRD
AP_BI_RCAM_I2C_SDA   AP_BI_RCAM_I2C_SDA -                  7C4 15A6 20C7 21B7
                     @single_brd_lib.SINGLE_BRD
AP_BI_RCAM_I2C_SDA_C AP_BI_RCAM_I2C_SDA_CONN -             21C4
ONN                  @single_brd_lib.SINGLE_BRD
AP_TO_BB_HSIC1_RDY   AP_TO_BB_HSIC1_RDY -                  3C2 23B6
                     @single_brd_lib.SINGLE_BRD
                     AP_HSIC1_RDY -                        44C1 44C8 48B2
                     @single_brd_lib.RADIO_MLB(i624_page
                     23)
AP_TO_BB_I2S1_DOUT   AP_TO_BB_I2S1_DOUT -                  3C4 23C6
                     @single_brd_lib.SINGLE_BRD
                     BB_I2S_RXD -                          44B6 44C8 48B4
                     @single_brd_lib.RADIO_MLB(i624_page
                     23)
AP_TO_BB_I2S1_LRCLK  AP_TO_BB_I2S1_LRCLK -                 3C4 23C6
                     @single_brd_lib.SINGLE_BRD
                     BB_I2S_WS -                           44B6 44C8 48B4
                     @single_brd_lib.RADIO_MLB(i624_page
                     23)
AP_TO_BB_JTAG_TCK    AP_TO_BB_JTAG_TCK -                   3B7 23D3
                     @single_brd_lib.SINGLE_BRD
                     BB_JTAG_TCK -                         44B8 44C3 47B5
                     @single_brd_lib.RADIO_MLB(i624_page
                     23)
AP_TO_BB_JTAG_TDI    AP_TO_BB_JTAG_TDI -                   3C7 23D3
                     @single_brd_lib.SINGLE_BRD
                     BB_JTAG_TDI -                         44B8 44C3 47B5
                     @single_brd_lib.RADIO_MLB(i624_page
                     23)
AP_TO_BB_JTAG_TMS    AP_TO_BB_JTAG_TMS -                   3B7 23D3
```

```
                     @single_brd_lib.SINGLE_BRD
                     BB_JTAG_TMS -                         44B8 44C3 47B5
                     @single_brd_lib.RADIO_MLB(i624_page
                     23)
AP_TO_BB_JTAG_TRST_L AP_TO_BB_JTAG_TRST_L -                3D5 23D3
                     @single_brd_lib.SINGLE_BRD
                     BB_JTAG_TRST_L -                      44B8 44C3 47B5
                     @single_brd_lib.RADIO_MLB(i624_page
                     23)
AP_TO_BB_RST_L       AP_TO_BB_RST_L -                      3C8 23D6
                     @single_brd_lib.SINGLE_BRD
                     BB_RST_L -                            44C1 44D8 46C8
                     @single_brd_lib.RADIO_MLB(i624_page
                     23)
AP_TO_BB_UART4_RTS_L AP_TO_BB_UART4_RTS_L -                3C5 23C6
                     @single_brd_lib.SINGLE_BRD
                     BB_UART_CTS_L -                       44C3 44C8 48C4
                     @single_brd_lib.RADIO_MLB(i624_page
                     23)
AP_TO_BB_UART4_TXD   AP_TO_BB_UART4_TXD -                  3C5 16C4 23C6
                     @single_brd_lib.SINGLE_BRD
                     BB_UART_RXD -                         44C3 44C8 48C4
                     @single_brd_lib.RADIO_MLB(i624_page
                     23)
AP_TO_BB_WAKE_MODEM  AP_TO_BB_WAKE_MODEM -                 3C8 23B6
                     @single_brd_lib.SINGLE_BRD
                     AP_WAKE_MODEM -                       44D8 48B4
                     @single_brd_lib.RADIO_MLB(i624_page
                     23)
AP_TO_BT_I2S3_DOUT   AP_TO_BT_I2S3_DOUT -                  3C4 23B6
                     @single_brd_lib.SINGLE_BRD
                     BT_PCM_IN -                           44B8 65B3
                     @single_brd_lib.RADIO_MLB(i624_page
                     23)
AP_TO_BT_I2S3_LRCLK  AP_TO_BT_I2S3_LRCLK -                 3C4 23B6
                     @single_brd_lib.SINGLE_BRD
                     BT_PCM_SYNC -                         44B8 65B3
                     @single_brd_lib.RADIO_MLB(i624_page
                     23)
AP_TO_BT_UART1_RTS_L AP_TO_BT_UART1_RTS_L -                3C5 23B6
                     @single_brd_lib.SINGLE_BRD
                     BT_UART_CTS_L -                       44B8 65B3
                     @single_brd_lib.RADIO_MLB(i624_page
                     23)
AP_TO_BT_UART1_TXD   AP_TO_BT_UART1_TXD -                  3C5 23B6
                     @single_brd_lib.SINGLE_BRD
                     BT_UART_RXD -                         44B6 44B8 65C3
                     @single_brd_lib.RADIO_MLB(i624_page
                     23)
AP_TO_BT_WAKE        AP_TO_BT_WAKE -                       3C8 23B6
                     @single_brd_lib.SINGLE_BRD
                     BT_WAKE -                             44B8 44D1 65C2
                     @single_brd_lib.RADIO_MLB(i624_page
                     23)
AP_TO_CODEC_ASP_I2S0 AP_TO_CODEC_ASP_I2S0_DOUT -           3D4 10C3
_DOUT                @single_brd_lib.SINGLE_BRD
AP_TO_CODEC_ASP_I2S0 AP_TO_CODEC_ASP_I2S0_LRCLK -          3D4 10D3
_LRCLK               @single_brd_lib.SINGLE_BRD
AP_TO_CODEC_SPI3_CLK AP_TO_CODEC_SPI3_CLK -                3B4 10C3
                     @single_brd_lib.SINGLE_BRD
AP_TO_CODEC_SPI3_CS_ AP_TO_CODEC_SPI3_CS_L -               3B4 10C3
L                    @single_brd_lib.SINGLE_BRD
AP_TO_CODEC_SPI3_MOS AP_TO_CODEC_SPI3_MOSI -               3B4 10C3
I                    @single_brd_lib.SINGLE_BRD
AP_TO_CODEC_VSP_I2S4 AP_TO_CODEC_VSP_I2S4_DOUT -           3C4 10C3
_DOUT                @single_brd_lib.SINGLE_BRD
AP_TO_CODEC_VSP_I2S4 AP_TO_CODEC_VSP_I2S4_LRCLK -          3C4 10C3
_LRCLK               @single_brd_lib.SINGLE_BRD
AP_TO_CODEC_XSP_I2S2 AP_TO_CODEC_XSP_I2S2_DOUT -           3C4 10C3 15C6
_DOUT                @single_brd_lib.SINGLE_BRD
AP_TO_CODEC_XSP_I2S2 AP_TO_CODEC_XSP_I2S2_LRCLK -          3C4 10C3 15C6
_LRCLK               @single_brd_lib.SINGLE_BRD
AP_TO_EEPROM_I2C_SCL AP_TO_EEPROM_I2C_SCL -                3C2 16B6
                     @single_brd_lib.SINGLE_BRD
AP_TO_FCAM_I2C_SCL   AP_TO_FCAM_I2C_SCL -                  7C4 11D7
                     @single_brd_lib.SINGLE_BRD
AP_TO_FCAM_SCL_CONN  AP_TO_FCAM_SCL_CONN -                 11D6
                     @single_brd_lib.SINGLE_BRD
AP_TO_FCAM_SHUTDOWN  AP_TO_FCAM_SHUTDOWN -                 7C5 11D8
                     @single_brd_lib.SINGLE_BRD
AP_TO_FCAM_SHUTDOWN_ AP_TO_FCAM_SHUTDOWN_CONN -            11D6
CONN                 @single_brd_lib.SINGLE_BRD
AP_TO_HEADSET_HS3_CT AP_TO_HEADSET_HS3_CTRL -              3C8 17C8
RL                   @single_brd_lib.SINGLE_BRD
AP_TO_HEADSET_HS3_CT AP_TO_HEADSET_HS3_CTRL_CONN -         17C7
RL_CONN              @single_brd_lib.SINGLE_BRD
AP_TO_HEADSET_HS4_CT AP_TO_HEADSET_HS4_CTRL -              3C8 17B8
RL                   @single_brd_lib.SINGLE_BRD
AP_TO_HEADSET_HS4_CT AP_TO_HEADSET_HS4_CTRL_CONN -         17C4 17C6
RL_CONN              @single_brd_lib.SINGLE_BRD
AP_TO_I2C0_SCL       AP_TO_I2C0_SCL -                      3D1 13B6 14B7 14C6 15C6
                     @single_brd_lib.SINGLE_BRD            16C2
AP_TO_I2C1_SCL       AP_TO_I2C1_SCL -                      3D1 11B7
                     @single_brd_lib.SINGLE_BRD
AP_TO_I2C1_SCL_ALS_C AP_TO_I2C1_SCL_ALS_CONN -             11C5
ONN                  @single_brd_lib.SINGLE_BRD
AP_TO_LCM_RESET_CONN AP_TO_LCM_RESET_CONN_L -              19C5
_L                   @single_brd_lib.SINGLE_BRD
AP_TO_LCM_RESET_L    AP_TO_LCM_RESET_L -                   3C8 19C2
                     @single_brd_lib.SINGLE_BRD
AP_TO_LEDDRV_EN      AP_TO_LEDDRV_EN -                     7C8 15A6
                     @single_brd_lib.SINGLE_BRD
AP_TO_NAND_ANC0_ALE  AP_TO_NAND_ANC0_ALE -                 6B8 6C2
                     @single_brd_lib.SINGLE_BRD
AP_TO_NAND_ANC0_CEN0 AP_TO_NAND_ANC0_CEN0_L -              6C2 6C8
_L                   @single_brd_lib.SINGLE_BRD
AP_TO_NAND_ANC0_CLE  AP_TO_NAND_ANC0_CLE -                 6B8 6C2
                     @single_brd_lib.SINGLE_BRD
AP_TO_NAND_ANC0_WE_L AP_TO_NAND_ANC0_WE_L -                6B8 6C2
                     @single_brd_lib.SINGLE_BRD
AP_TO_NAND_ANC1_ALE  AP_TO_NAND_ANC1_ALE -                 6B6 6C3
                     @single_brd_lib.SINGLE_BRD
AP_TO_NAND_ANC1_CEN0 AP_TO_NAND_ANC1_CEN0_L -              6C3 6C6
_L                   @single_brd_lib.SINGLE_BRD
AP_TO_NAND_ANC1_CLE  AP_TO_NAND_ANC1_CLE -                 6B6 6C3
                     @single_brd_lib.SINGLE_BRD
AP_TO_NAND_ANC1_WE_L AP_TO_NAND_ANC1_WE_L -                6B6 6C3
                     @single_brd_lib.SINGLE_BRD
AP_TO_NAND_ANC_DQVRE AP_TO_NAND_ANC_DQVREF -               6B2 6B6 6B8 6C5
F                    @single_brd_lib.SINGLE_BRD
AP_TO_NAVAJO_DAISY_C AP_TO_NAVAJO_DAISY_CHAIN -            3B8 17C1
HAIN                 @single_brd_lib.SINGLE_BRD
AP_TO_NAVAJO_SPI2_CL AP_TO_NAVAJO_SPI2_CLK -               3B5 17D1
K                    @single_brd_lib.SINGLE_BRD
```

AP_TO_NAVAJO_SPI2_CLK_CONN	AP_TO_NAVAJO_SPI2_CLK_CONN - @single_brd_lib.SINGLE_BRD	17C4 17D3
AP_TO_NAVAJO_SPI2_MOSI	AP_TO_NAVAJO_SPI2_MOSI - @single_brd_lib.SINGLE_BRD	3B5 17D1
AP_TO_NAVAJO_SPI2_MOSI_CONN	AP_TO_NAVAJO_SPI2_MOSI_CONN - @single_brd_lib.SINGLE_BRD	17C5 17D3
AP_TO_OSCAR_DBGEN	AP_TO_OSCAR_DBGEN - @single_brd_lib.SINGLE_BRD	3C8 20C5
AP_TO_OSCAR_RESET_L	AP_TO_OSCAR_RESET_L - @single_brd_lib.SINGLE_BRD	3C5 20C7
AP_TO_OSCAR_SWDCLK_1V8	AP_TO_OSCAR_SWDCLK_1V8 - @single_brd_lib.SINGLE_BRD	3C2 20C5
AP_TO_OSCAR_UART2_TXD	AP_TO_OSCAR_UART2_TXD - @single_brd_lib.SINGLE_BRD	3C5 20C5
AP_TO_PMU_KEEPACT	AP_TO_PMU_KEEPACT - @single_brd_lib.SINGLE_BRD	3C8 13B2
AP_TO_PMU_RESET_IN	AP_TO_PMU_RESET_IN - @single_brd_lib.SINGLE_BRD	2B3 13B6
AP_TO_PMU_SOCHOT1	AP_TO_PMU_SOCHOT1 - @single_brd_lib.SINGLE_BRD	3B1 13B6
AP_TO_PMU_SOCHOT1_H6P	AP_TO_PMU_SOCHOT1_H6P - @single_brd_lib.SINGLE_BRD	3B2
AP_TO_PMU_TEST_CLKOUT	AP_TO_PMU_TEST_CLKOUT - @single_brd_lib.SINGLE_BRD	2B3 13C6
AP_TO_PMU_VIBE_PWM_EN	AP_TO_PMU_VIBE_PWM_EN - @single_brd_lib.SINGLE_BRD	3C5 12B7
AP_TO_RADIO_ON_L	AP_TO_RADIO_ON_L - @single_brd_lib.SINGLE_BRD	3C8 23D6
	RADIO_ON_L - @single_brd_lib.RADIO_MLB(i624_page 23)	44D3 44D8 46C8
AP_TO_RCAM_I2C_SCL	AP_TO_RCAM_I2C_SCL - @single_brd_lib.SINGLE_BRD	7C4 15A6 20D5 21B7
AP_TO_RCAM_I2C_SCL_CONN	AP_TO_RCAM_I2C_SCL_CONN - @single_brd_lib.SINGLE_BRD	21C4
AP_TO_RCAM_SHUTDOWN	AP_TO_RCAM_SHUTDOWN - @single_brd_lib.SINGLE_BRD	7C5 21B7
AP_TO_RCAM_SHUTDOWN_CONN	AP_TO_RCAM_SHUTDOWN_CONN - @single_brd_lib.SINGLE_BRD	21B4
AP_TO_RCAM_VDDCORE_EN	AP_TO_RCAM_VDDCORE_EN - @single_brd_lib.SINGLE_BRD	3C5 21C7
AP_TO_SPKAMP_BEE_GEES	AP_TO_SPKAMP_BEE_GEES - @single_brd_lib.SINGLE_BRD	3D8 15C6
AP_TO_SPKAMP_RESET_L	AP_TO_SPKAMP_RESET_L - @single_brd_lib.SINGLE_BRD	3C8 15C7
AP_TO_TOUCH_GRAPE_RESET_L	AP_TO_TOUCH_GRAPE_RESET_L - @single_brd_lib.SINGLE_BRD	3C8 18B7
AP_TO_TOUCH_SPI1_CLK	AP_TO_TOUCH_SPI1_CLK - @single_brd_lib.SINGLE_BRD	3B4 18B8
AP_TO_TOUCH_SPI1_CS_L	AP_TO_TOUCH_SPI1_CS_L - @single_brd_lib.SINGLE_BRD	3B4 18B8
AP_TO_TOUCH_SPI1_MOSI	AP_TO_TOUCH_SPI1_MOSI - @single_brd_lib.SINGLE_BRD	3B4 18B8
AP_TO_TRISTAR_ACC_UART6_TXD	AP_TO_TRISTAR_ACC_UART6_TXD - @single_brd_lib.SINGLE_BRD	3B5 16C4
AP_TO_TRISTAR_DEBUG_UART0_TXD	AP_TO_TRISTAR_DEBUG_UART0_TXD - @single_brd_lib.SINGLE_BRD	3C5 16C4
AP_TO_WLAN_HSIC2_RDY	AP_TO_WLAN_HSIC2_RDY - @single_brd_lib.SINGLE_BRD	3C2 23B6
	AP_HSIC3_RDY - @single_brd_lib.RADIO_MLB(i624_page 23)	44C6 44C8 65B3
AP_TO_WLAN_UART3_TXD	AP_TO_WLAN_UART3_TXD - @single_brd_lib.SINGLE_BRD	3C5 23C6
	WLAN_UART_RXD - @single_brd_lib.RADIO_MLB(i624_page 23)	44C8 65B3
BATTERY_NTC_CONN	BATTERY_NTC_CONN - @single_brd_lib.SINGLE_BRD	17C4
BATTERY_TO_PMU_NTC	BATTERY_TO_PMU_NTC - @single_brd_lib.SINGLE_BRD	13A6 17C1 22C4
BATTERY_TO_PMU_SENSE	BATTERY_TO_PMU_SENSE - @single_brd_lib.SINGLE_BRD	12C7 22C4 22C6
BB_TO_ANTENNA_PAC_SPI_CS	BB_TO_ANTENNA_PAC_SPI_CS - @single_brd_lib.SINGLE_BRD	8B2 23A6
	BB_SPI_TO_PAC_CS - @single_brd_lib.RADIO_MLB(i624_page 23)	44B8 48C4 62D7
BB_TO_ANTENNA_PAC_SPI_MOSI	BB_TO_ANTENNA_PAC_SPI_MOSI - @single_brd_lib.SINGLE_BRD	8B2 23A6
	BB_SPI_TO_PAC_DATA_MOSI - @single_brd_lib.RADIO_MLB(i624_page 23)	44B8 48C4 62C7
BB_TO_ANTENNA_PAC_SPI_SCLK	BB_TO_ANTENNA_PAC_SPI_SCLK - @single_brd_lib.SINGLE_BRD	8C2 23A6
	BB_SPI_TO_PAC_CLK - @single_brd_lib.RADIO_MLB(i624_page 23)	44B8 48C4 62C7
BB_TO_ANT_PAC_SPI_CS_BUTTON_CONN_L	BB_TO_ANT_PAC_SPI_CS_BUTTON_CONN_L - @single_brd_lib.SINGLE_BRD	8C4
BB_TO_ANT_PAC_SPI_MOSI_BUTTON_CONN	BB_TO_ANT_PAC_SPI_MOSI_BUTTON_CONN - @single_brd_lib.SINGLE_BRD	8C4
BB_TO_ANT_PAC_SPI_SCLK_BUTTON_CONN	BB_TO_ANT_PAC_SPI_SCLK_BUTTON_CONN - @single_brd_lib.SINGLE_BRD	8C4
BB_TO_AP_HSIC1_RDY	BB_TO_AP_HSIC1_RDY - @single_brd_lib.SINGLE_BRD	3C2 23B6
	PBL_RUN_BB_HSIC1_RDY - @single_brd_lib.RADIO_MLB(i624_page 23)	44C1 44D8 48B2
BB_TO_AP_HSIC1_REMOTE_WAKE	BB_TO_AP_HSIC1_REMOTE_WAKE - @single_brd_lib.SINGLE_BRD	3C2 23B6
	BB_HSIC1_REMOTE_WAKE - @single_brd_lib.RADIO_MLB(i624_page 23)	44C8 48B2
BB_TO_AP_I2S1_DIN	BB_TO_AP_I2S1_DIN - @single_brd_lib.SINGLE_BRD	3C4 23C6
	BB_I2S_TXD - @single_brd_lib.RADIO_MLB(i624_page 23)	44A6 44C8 48B4
BB_TO_AP_IPC_GPIO	BB_TO_AP_IPC_GPIO - @single_brd_lib.SINGLE_BRD	7C8 23A6
	BB_IPC_GPIO - @single_brd_lib.RADIO_MLB(i624_page 23)	44A8 48B2
BB_TO_AP_JTAG_TDO	BB_TO_AP_JTAG_TDO - @single_brd_lib.SINGLE_BRD	3C7 23D3
	BB_JTAG_TDO - @single_brd_lib.RADIO_MLB(i624_page 23)	44B8 44C3 47B3
BB_TO_AP_PP_SYNC	BB_TO_AP_PP_SYNC - @single_brd_lib.SINGLE_BRD	3C5 23C6
	PP_SYNC - @single_brd_lib.RADIO_MLB(i624_page 23)	44C8 48B2
BB_TO_AP_RESET_DET_L	BB_TO_AP_RESET_DET_L - @single_brd_lib.SINGLE_BRD	3C8 23D6
	RESET_DET_L - @single_brd_lib.RADIO_MLB(i624_page 23)	44C1 44D8 48B2
BB_TO_AP_SOCHOT0	BB_TO_AP_SOCHOT0 - @single_brd_lib.SINGLE_BRD	3B1 23A6
	TX_GTR_THRESH_OD - @single_brd_lib.RADIO_MLB(i624_page 23)	44A8 48B2
BB_TO_AP_UART4_CTS_L	BB_TO_AP_UART4_CTS_L - @single_brd_lib.SINGLE_BRD	3C5 23C6
	BB_UART_RTS_L - @single_brd_lib.RADIO_MLB(i624_page 23)	44C3 44C8 48C4
BB_TO_AP_UART4_RXD	BB_TO_AP_UART4_RXD - @single_brd_lib.SINGLE_BRD	3C5 16C4 23C6
	BB_UART_TXD - @single_brd_lib.RADIO_MLB(i624_page 23)	44C3 44C8 48C4
BB_TO_LAT_SW1_CTL	BB_TO_LAT_SW1_CTL - @single_brd_lib.SINGLE_BRD	17B1 23A6
	LAT_SW1_CTL - @single_brd_lib.RADIO_MLB(i624_page 23)	44B8 44C1 48C2
BB_TO_LAT_SW2_CTL	BB_TO_LAT_SW2_CTL - @single_brd_lib.SINGLE_BRD	17B1 23A6
	LAT_SW2_CTL - @single_brd_lib.RADIO_MLB(i624_page 23)	44B8 48C2
BB_TO_LAT_SW3_CTL	BB_TO_LAT_SW3_CTL - @single_brd_lib.SINGLE_BRD	17B1 17C5 23A6
	LAT_SW3_CTL - @single_brd_lib.RADIO_MLB(i624_page 23)	44B8 48C2
BB_TO_LEDDRV_GSM_BLANK	BB_TO_LEDDRV_GSM_BLANK - @single_brd_lib.SINGLE_BRD	15A6 23D6
	TX_GTR_THRESH - @single_brd_lib.RADIO_MLB(i624_page 23)	44D8 48C2
BB_TO_PMU_HOST_WAKE	BB_TO_PMU_HOST_WAKE - @single_brd_lib.SINGLE_BRD	13B4 23C6
	HOST_WAKE_BB - @single_brd_lib.RADIO_MLB(i624_page 23)	44C1 44D8 48B2
BOARD_INFO	BOARD_INFO - @single_brd_lib.SINGLE_BRD	3A6 3B8 3C4 3C8 3C8
BT_TO_AP_I2S3_DIN	BT_TO_AP_I2S3_DIN - @single_brd_lib.SINGLE_BRD	3C4 23B6
	BT_PCM_OUT - @single_brd_lib.RADIO_MLB(i624_page 23)	44B8 65B3
BT_TO_AP_UART1_CTS_L	BT_TO_AP_UART1_CTS_L - @single_brd_lib.SINGLE_BRD	3C5 23B6
	BT_UART_RTS_L - @single_brd_lib.RADIO_MLB(i624_page 23)	44B8 65C3
BT_TO_AP_UART1_RXD	BT_TO_AP_UART1_RXD - @single_brd_lib.SINGLE_BRD	3C5 23B6
	BT_UART_TXD - @single_brd_lib.RADIO_MLB(i624_page 23)	44B6 44B8 65C3
BT_TO_PMU_HOST_WAKE	BT_TO_PMU_HOST_WAKE - @single_brd_lib.SINGLE_BRD	13B4 23B6
	HOST_WAKE_BT - @single_brd_lib.RADIO_MLB(i624_page 23)	44C8 65C3
BUTTON_TO_AP_HOLD_KEY_BUFF_L	BUTTON_TO_AP_HOLD_KEY_BUFF_L - @single_brd_lib.SINGLE_BRD	3A2 3D8 13C4 13C6
BUTTON_TO_AP_HOLD_KEY_CONN_L	BUTTON_TO_AP_HOLD_KEY_CONN_L - @single_brd_lib.SINGLE_BRD	8C5
BUTTON_TO_AP_HOLD_KEY_L	BUTTON_TO_AP_HOLD_KEY_L - @single_brd_lib.SINGLE_BRD	3A4 8B7
BUTTON_TO_AP_MENU_KEY_BUFF_L	BUTTON_TO_AP_MENU_KEY_BUFF_L - @single_brd_lib.SINGLE_BRD	3A2 3D8 13C4 13C6
BUTTON_TO_AP_MENU_KEY_CONN_L	BUTTON_TO_AP_MENU_KEY_CONN_L - @single_brd_lib.SINGLE_BRD	17C5
BUTTON_TO_AP_MENU_KEY_L	BUTTON_TO_AP_MENU_KEY_L - @single_brd_lib.SINGLE_BRD	3A4 17B8
BUTTON_TO_AP_RINGER_A	BUTTON_TO_AP_RINGER_A - @single_brd_lib.SINGLE_BRD	3C8 8B7 13C4 13C6
BUTTON_TO_AP_RINGER_A_CONN	BUTTON_TO_AP_RINGER_A_CONN - @single_brd_lib.SINGLE_BRD	8C5
BUTTON_TO_AP_VOL_DOWN_CONN_L	BUTTON_TO_AP_VOL_DOWN_CONN_L - @single_brd_lib.SINGLE_BRD	8C5
BUTTON_TO_AP_VOL_DOWN_L	BUTTON_TO_AP_VOL_DOWN_L - @single_brd_lib.SINGLE_BRD	3D8 8B7 13C6
BUTTON_TO_AP_VOL_UP_CONN_L	BUTTON_TO_AP_VOL_UP_CONN_L - @single_brd_lib.SINGLE_BRD	8C5
BUTTON_TO_AP_VOL_UP_L	BUTTON_TO_AP_VOL_UP_L - @single_brd_lib.SINGLE_BRD	3D8 8B7 13C6
CAM_NTC_N	CAM_NTC_N - @single_brd_lib.SINGLE_BRD	13B7
CAM_NTC_P	CAM_NTC_P - @single_brd_lib.SINGLE_BRD	13B7
CAM_TO_PMU_NTC_P	CAM_TO_PMU_NTC_P - @single_brd_lib.SINGLE_BRD	13B6
CHESTNUT_TO_PMU_ADCIN7	CHESTNUT_TO_PMU_ADCIN7 - @single_brd_lib.SINGLE_BRD	13C2 13C6 14C6
CODEC_MBUS_REF	CODEC_MBUS_REF - @single_brd_lib.SINGLE_BRD	9B3 17D5
CODEC_RESET_L	CODEC_RESET_L - @single_brd_lib.SINGLE_BRD	10C3
CODEC_TO_AP_ASP_I2S0_DIN	CODEC_TO_AP_ASP_I2S0_DIN - @single_brd_lib.SINGLE_BRD	3D4 10C3
CODEC_TO_AP_INT_L	CODEC_TO_AP_INT_L - @single_brd_lib.SINGLE_BRD	3C8 10C3
CODEC_TO_AP_SPI3_MISO	CODEC_TO_AP_SPI3_MISO - @single_brd_lib.SINGLE_BRD	3B4 10C3
CODEC_TO_AP_VSP_I2S4_DIN	CODEC_TO_AP_VSP_I2S4_DIN - @single_brd_lib.SINGLE_BRD	3C4 10C3
CODEC_TO_AP_XSP_I2S2_DIN	CODEC_TO_AP_XSP_I2S2_DIN - @single_brd_lib.SINGLE_BRD	3C4 10C3 15C6
CODEC_TO_HAC_CONN_N	CODEC_TO_HAC_CONN_N - @single_brd_lib.SINGLE_BRD	11A6
CODEC_TO_HAC_CONN_P	CODEC_TO_HAC_CONN_P - @single_brd_lib.SINGLE_BRD	11A6
CODEC_TO_HAC_N	CODEC_TO_HAC_N - @single_brd_lib.SINGLE_BRD	9C3 11A8
CODEC_TO_HAC_P	CODEC_TO_HAC_P - @single_brd_lib.SINGLE_BRD	9C3 11A8
CODEC_TO_HPHONE_HS3	CODEC_TO_HPHONE_HS3 - @single_brd_lib.SINGLE_BRD	9C3 17C8
CODEC_TO_HPHONE_HS3_CONN	CODEC_TO_HPHONE_HS3_CONN - @single_brd_lib.SINGLE_BRD	17C4 17C6
CODEC_TO_HPHONE_HS3_REF	CODEC_TO_HPHONE_HS3_REF - @single_brd_lib.SINGLE_BRD	9B3 17C7
CODEC_TO_HPHONE_HS3_REF_CONN	CODEC_TO_HPHONE_HS3_REF_CONN - @single_brd_lib.SINGLE_BRD	17C5 22B5
CODEC_TO_HPHONE_HS4	CODEC_TO_HPHONE_HS4 - @single_brd_lib.SINGLE_BRD	9B3 17C8
CODEC_TO_HPHONE_HS4_CONN	CODEC_TO_HPHONE_HS4_CONN - @single_brd_lib.SINGLE_BRD	17C6
CODEC_TO_HPHONE_HS4_REF	CODEC_TO_HPHONE_HS4_REF - @single_brd_lib.SINGLE_BRD	9B3 17C7
CODEC_TO_HPHONE_HS4_REF_CONN	CODEC_TO_HPHONE_HS4_REF_CONN - @single_brd_lib.SINGLE_BRD	17C5 22B5
CODEC_TO_HPHONE_L	CODEC_TO_HPHONE_L - @single_brd_lib.SINGLE_BRD	9C2 17C1
CODEC_TO_HPHONE_L_CONN	CODEC_TO_HPHONE_L_CONN - @single_brd_lib.SINGLE_BRD	17C4
CODEC_TO_HPHONE_R	CODEC_TO_HPHONE_R - @single_brd_lib.SINGLE_BRD	9C2 17C1
CODEC_TO_HPHONE_R_CONN	CODEC_TO_HPHONE_R_CONN - @single_brd_lib.SINGLE_BRD	17C4
CODEC_TO_MIC2_BIAS_CONN	CODEC_TO_MIC2_BIAS_CONN - @single_brd_lib.SINGLE_BRD	8C4
CODEC_TO_PMU_MIKEY_INT_L	CODEC_TO_PMU_MIKEY_INT_L - @single_brd_lib.SINGLE_BRD	10C3 13B4
CODEC_TO_RCVR_CONN_N	CODEC_TO_RCVR_CONN_N - @single_brd_lib.SINGLE_BRD	11A6
CODEC_TO_RCVR_CONN_P	CODEC_TO_RCVR_CONN_P - @single_brd_lib.SINGLE_BRD	11A6
CODEC_TO_RCVR_N	CODEC_TO_RCVR_N - @single_brd_lib.SINGLE_BRD	9C3 11A8
CODEC_TO_RCVR_P	CODEC_TO_RCVR_P - @single_brd_lib.SINGLE_BRD	9C3 11A8
COMPASS_TO_OSCAR_INT	COMPASS_TO_OSCAR_INT - @single_brd_lib.SINGLE_BRD	20C7
COMPASS_TO_OSCAR_INT_FL	COMPASS_TO_OSCAR_INT_FL - @single_brd_lib.SINGLE_BRD	20A5 20D8
CUMULUS_TO_PROX_RX_EN_1V8	CUMULUS_TO_PROX_RX_EN_1V8 - @single_brd_lib.SINGLE_BRD	11C8 18B5
CUMULUS_TO_PROX_RX_EN_1V8_CONN	CUMULUS_TO_PROX_RX_EN_1V8_CONN - @single_brd_lib.SINGLE_BRD	11C5
CUMULUS_TO_PROX_TX_EN_1V8_L	CUMULUS_TO_PROX_TX_EN_1V8_L - @single_brd_lib.SINGLE_BRD	18A3 18B7
CUMULUS_TO_PROX_TX_EN_BUFF	CUMULUS_TO_PROX_TX_EN_BUFF - @single_brd_lib.SINGLE_BRD	11B2 18A4
CUMULUS_TO_SAGE_BOOST_EN	CUMULUS_TO_SAGE_BOOST_EN - @single_brd_lib.SINGLE_BRD	18B1 18B5
CUMULUS_TO_SAGE_GCM_SEL	CUMULUS_TO_SAGE_GCM_SEL - @single_brd_lib.SINGLE_BRD	18B1 18B5
CUMULUS_TO_SAGE_VSTM_OUT<0>	CUMULUS_TO_SAGE_VSTM_OUT<0> - @single_brd_lib.SINGLE_BRD	18B3 18B5
CUMULUS_TO_SAGE_VSTM_OUT<1>	CUMULUS_TO_SAGE_VSTM_OUT<1> - @single_brd_lib.SINGLE_BRD	18C3 18C5
CUMULUS_TO_SAGE_VSTM_OUT<2>	CUMULUS_TO_SAGE_VSTM_OUT<2> - @single_brd_lib.SINGLE_BRD	18B3 18C5
CUMULUS_TO_SAGE_VSTM_OUT<3>	CUMULUS_TO_SAGE_VSTM_OUT<3> - @single_brd_lib.SINGLE_BRD	18B3 18C5
CUMULUS_TO_SAGE_VSTM_OUT<4>	CUMULUS_TO_SAGE_VSTM_OUT<4> - @single_brd_lib.SINGLE_BRD	18C3 18C5
CUMULUS_TO_SAGE_VSTM_OUT<5>	CUMULUS_TO_SAGE_VSTM_OUT<5> - @single_brd_lib.SINGLE_BRD	18C3 18C5
CUMULUS_TO_SAGE_VSTM_OUT<6>	CUMULUS_TO_SAGE_VSTM_OUT<6> - @single_brd_lib.SINGLE_BRD	18B5 18C3
CUMULUS_TO_SAGE_VSTM_OUT<7>	CUMULUS_TO_SAGE_VSTM_OUT<7> - @single_brd_lib.SINGLE_BRD	18C3 18C5
CUMULUS_TO_SAGE_VSTM_OUT<8>	CUMULUS_TO_SAGE_VSTM_OUT<8> - @single_brd_lib.SINGLE_BRD	18C3 18C5
CUMULUS_TO_SAGE_VSTM_OUT<9>	CUMULUS_TO_SAGE_VSTM_OUT<9> - @single_brd_lib.SINGLE_BRD	18C6
CUMULUS_TO_SAGE_VSTM_OUT<10>	CUMULUS_TO_SAGE_VSTM_OUT<10> - @single_brd_lib.SINGLE_BRD	18C6
CUMULUS_TO_SAGE_VSTM_OUT<11>	CUMULUS_TO_SAGE_VSTM_OUT<11> - @single_brd_lib.SINGLE_BRD	18B3 18C5
CUMULUS_TO_SAGE_VSTM_OUT<12>	CUMULUS_TO_SAGE_VSTM_OUT<12> - @single_brd_lib.SINGLE_BRD	18B5 18C3
CUMULUS_TO_SAGE_VSTM_OUT<13>	CUMULUS_TO_SAGE_VSTM_OUT<13> - @single_brd_lib.SINGLE_BRD	18C3 18C5
CUMULUS_TO_SAGE_VSTM_OUT<14>	CUMULUS_TO_SAGE_VSTM_OUT<14> - @single_brd_lib.SINGLE_BRD	18B5 18C3
CUMULUS_TO_SAGE_VSTM_OUT<15>	CUMULUS_TO_SAGE_VSTM_OUT<15> - @single_brd_lib.SINGLE_BRD	18B5 18C3
CUMULUS_TO_SAGE_VSTM_OUT<16>	CUMULUS_TO_SAGE_VSTM_OUT<16> - @single_brd_lib.SINGLE_BRD	18B3 18C5
CUMULUS_TO_SAGE_VSTM_OUT<17>	CUMULUS_TO_SAGE_VSTM_OUT<17> - @single_brd_lib.SINGLE_BRD	18B3 18C5
CUMULUS_TO_SAGE_VSTM_OUT<18>	CUMULUS_TO_SAGE_VSTM_OUT<18> - @single_brd_lib.SINGLE_BRD	18C3 18C5
CUMULUS_TO_SAGE_VSTM_OUT<19>	CUMULUS_TO_SAGE_VSTM_OUT<19> - @single_brd_lib.SINGLE_BRD	18B5 18C3
E75_TO_PMU_ACC_DETECT	E75_TO_PMU_ACC_DETECT - @single_brd_lib.SINGLE_BRD	13C2 16C2 17A1
E75_TO_PMU_ACC_DETECT_CONN	E75_TO_PMU_ACC_DETECT_CONN - @single_brd_lib.SINGLE_BRD	17B4 22B3
E75_TO_PMU_ACC_DETECT_R	E75_TO_PMU_ACC_DETECT_R - @single_brd_lib.SINGLE_BRD	13C4
EXTMIC_TO_CODEC_L67_N	EXTMIC_TO_CODEC_L67_N - @single_brd_lib.SINGLE_BRD	9C5
EXTMIC_TO_CODEC_L67_P	EXTMIC_TO_CODEC_L67_P - @single_brd_lib.SINGLE_BRD	9C5
EXTMIC_TO_CODEC_N	EXTMIC_TO_CODEC_N - @single_brd_lib.SINGLE_BRD	9C7 17C7
EXTMIC_TO_CODEC_P	EXTMIC_TO_CODEC_P - @single_brd_lib.SINGLE_BRD	9C7 17C7
FCAM_TO_AP_ALS_INT_CONN_L	FCAM_TO_AP_ALS_INT_CONN_L - @single_brd_lib.SINGLE_BRD	11C4
FCAM_TO_AP_ALS_INT_L	FCAM_TO_AP_ALS_INT_L - @single_brd_lib.SINGLE_BRD	7C8 11B2
FORCE_DFU	FORCE_DFU - @single_brd_lib.SINGLE_BRD	3B8 3C8 22B4
FOREHEAD_NTC_N	FOREHEAD_NTC_N - @single_brd_lib.SINGLE_BRD	13C7
FOREHEAD_NTC_P	FOREHEAD_NTC_P - @single_brd_lib.SINGLE_BRD	13C7
FOREHEAD_TO_PMU_NTC_P	FOREHEAD_TO_PMU_NTC_P - @single_brd_lib.SINGLE_BRD	13B6
GYRO_PUMP	GYRO_PUMP - @single_brd_lib.SINGLE_BRD	20C3
GYRO_TO_OSCAR_INT1	GYRO_TO_OSCAR_INT1 - @single_brd_lib.SINGLE_BRD	20C3 20C7
GYRO_TO_OSCAR_INT2	GYRO_TO_OSCAR_INT2 - @single_brd_lib.SINGLE_BRD	20C1 20D7
H6P_NTC_N	H6P_NTC_N - @single_brd_lib.SINGLE_BRD	13A7
H6P_NTC_P	H6P_NTC_P - @single_brd_lib.SINGLE_BRD	13A7
H6P_TO_PMU_NTC_P	H6P_TO_PMU_NTC_P - @single_brd_lib.SINGLE_BRD	13B6
HAC_TO_CODEC_TEST	HAC_TO_CODEC_TEST - @single_brd_lib.SINGLE_BRD	9A7 11A7
HAC_TO_CODEC_TEST_L67	HAC_TO_CODEC_TEST_L67 - @single_brd_lib.SINGLE_BRD	9B6
HPHONE_TO_CODEC_DET	HPHONE_TO_CODEC_DET - @single_brd_lib.SINGLE_BRD	9B3 17D7
HPHONE_TO_CODEC_DET_CONN	HPHONE_TO_CODEC_DET_CONN - @single_brd_lib.SINGLE_BRD	17C5
HPHONE_TO_CODEC_HPHONE_TEST	HPHONE_TO_CODEC_HPHONE_TEST - @single_brd_lib.SINGLE_BRD	9A7 17C2
HPHONE_TO_CODEC_HPHONE_TEST_L67	HPHONE_TO_CODEC_HPHONE_TEST_L67 - @single_brd_lib.SINGLE_BRD	9B6
IMU_TO_OSCAR_SPI_MISO	IMU_TO_OSCAR_SPI_MISO - @single_brd_lib.SINGLE_BRD	20D5
IMU_TO_OSCAR_SPI_MISO_FL	IMU_TO_OSCAR_SPI_MISO_FL - @single_brd_lib.SINGLE_BRD	20A5 20B1 20C1 20D4
L19_SPKAMP_VSENSE_N	L19_SPKAMP_VSENSE_N - @single_brd_lib.SINGLE_BRD	15C5
L19_SPKAMP_VSENSE_P	L19_SPKAMP_VSENSE_P - @single_brd_lib.SINGLE_BRD	15C5
LCM_DESENSE	LCM_DESENSE - @single_brd_lib.SINGLE_BRD	14B5
LCM_DESENSE_CONN	LCM_DESENSE_CONN - @single_brd_lib.SINGLE_BRD	19B4
LCM_TO_AP_HIFA_BSYNC	LCM_TO_AP_HIFA_BSYNC - @single_brd_lib.SINGLE_BRD	3C8 14C6 18A3 18B1 19C2
LCM_TO_AP_HIFA_BSYNC_BUFF	LCM_TO_AP_HIFA_BSYNC_BUFF - @single_brd_lib.SINGLE_BRD	18A4
LCM_TO_AP_HIFA_BSYNC_CONN	LCM_TO_AP_HIFA_BSYNC_CONN - @single_brd_lib.SINGLE_BRD	19C5
LCM_TO_AP_PANIC_L	LCM_TO_AP_PANIC_L - @single_brd_lib.SINGLE_BRD	19C5
LCM_TO_AP_PIFA	LCM_TO_AP_PIFA - @single_brd_lib.SINGLE_BRD	3B4 19B2
LCM_TO_AP_PIFA_CONN	LCM_TO_AP_PIFA_CONN - @single_brd_lib.SINGLE_BRD	19C5
LCM_TO_CHESTNUT_PWR_EN	LCM_TO_CHESTNUT_PWR_EN - @single_brd_lib.SINGLE_BRD	13C6 14C6 19D2
LCM_TO_CHESTNUT_PWR_EN_CONN	LCM_TO_CHESTNUT_PWR_EN_CONN - @single_brd_lib.SINGLE_BRD	19C5
MESA_BOOST_FB	MESA_BOOST_FB - @single_brd_lib.SINGLE_BRD	14B2
MESA_TO_BOOST_EN	MESA_TO_BOOST_EN - @single_brd_lib.SINGLE_BRD	14A4 17D7
MESA_TO_BOOST_EN_DOCK_CONN	MESA_TO_BOOST_EN_DOCK_CONN - @single_brd_lib.SINGLE_BRD	17C5
MIC1_TO_CODEC_L67_N	MIC1_TO_CODEC_L67_N - @single_brd_lib.SINGLE_BRD	9C5
MIC1_TO_CODEC_L67_P	MIC1_TO_CODEC_L67_P - @single_brd_lib.SINGLE_BRD	9C5
MIC1_TO_CODEC_N	MIC1_TO_CODEC_N - @single_brd_lib.SINGLE_BRD	9C7 17B8
MIC1_TO_CODEC_P	MIC1_TO_CODEC_P - @single_brd_lib.SINGLE_BRD	9C7 17B8 22B3
MIC2_TO_CODEC_L67_N	MIC2_TO_CODEC_L67_N - @single_brd_lib.SINGLE_BRD	9C5
MIC2_TO_CODEC_L67_P	MIC2_TO_CODEC_L67_P - @single_brd_lib.SINGLE_BRD	9C5
MIC2_TO_CODEC_N	MIC2_TO_CODEC_N - @single_brd_lib.SINGLE_BRD	8C2 9B7
MIC2_TO_CODEC_P	MIC2_TO_CODEC_P - @single_brd_lib.SINGLE_BRD	8C2 9B7 22B3
MIC3_TO_CODEC_L67_N	MIC3_TO_CODEC_L67_N - @single_brd_lib.SINGLE_BRD	9B5
MIC3_TO_CODEC_L67_P	MIC3_TO_CODEC_L67_P - @single_brd_lib.SINGLE_BRD	9C5
MIC3_TO_CODEC_N	MIC3_TO_CODEC_N - @single_brd_lib.SINGLE_BRD	9B7 11C2
MIC3_TO_CODEC_P	MIC3_TO_CODEC_P - @single_brd_lib.SINGLE_BRD	9B7 11C2 22B3
NAND_RDYBSY0	NAND_RDYBSY0 - @single_brd_lib.SINGLE_BRD	6C3
NAND_RDYBSY1	NAND_RDYBSY1 - @single_brd_lib.SINGLE_BRD	6B3
NAND_TO_PP_TCKC	NAND_TO_PP_TCKC - @single_brd_lib.SINGLE_BRD	6B4
NAND_TO_PP_TMSC	NAND_TO_PP_TMSC - @single_brd_lib.SINGLE_BRD	6B4
NAVAJO_TO_AP_SPI2_MISO	NAVAJO_TO_AP_SPI2_MISO - @single_brd_lib.SINGLE_BRD	3B5 17D1
NAVAJO_TO_AP_SPI2_MISO_CONN	NAVAJO_TO_AP_SPI2_MISO_CONN - @single_brd_lib.SINGLE_BRD	17D3
NAVAJO_TO_PMU_INT_CONN_L	NAVAJO_TO_PMU_INT_CONN_L - @single_brd_lib.SINGLE_BRD	17C5 17D3
NAVAJO_TO_PMU_INT_L	NAVAJO_TO_PMU_INT_L - @single_brd_lib.SINGLE_BRD	3B5 13B4 17D1
OSCAR_BI_AP_TIME_SYNC_HOST_INT	OSCAR_BI_AP_TIME_SYNC_HOST_INT - @single_brd_lib.SINGLE_BRD	3D5 20C7
OSCAR_TO_ACCEL_SPI_CS_L	OSCAR_TO_ACCEL_SPI_CS_L - @single_brd_lib.SINGLE_BRD	20B3 20D7
OSCAR_TO_AP_UART2_RXD	OSCAR_TO_AP_UART2_RXD - @single_brd_lib.SINGLE_BRD	3C5 20C5
OSCAR_TO_COMPASS_SPI_CS_FL_L	OSCAR_TO_COMPASS_SPI_CS_FL_L - @single_brd_lib.SINGLE_BRD	20A5 20D8
OSCAR_TO_COMPASS_SPI_CS_L	OSCAR_TO_COMPASS_SPI_CS_L - @single_brd_lib.SINGLE_BRD	20C6
OSCAR_TO_GYRO_SPI_CS_L	OSCAR_TO_GYRO_SPI_CS_L - @single_brd_lib.SINGLE_BRD	20C1 20D7
OSCAR_TO_IMU_SPI_MOSI	OSCAR_TO_IMU_SPI_MOSI - @single_brd_lib.SINGLE_BRD	20D5
OSCAR_TO_IMU_SPI_MOSI_FL	OSCAR_TO_IMU_SPI_MOSI_FL - @single_brd_lib.SINGLE_BRD	20A5 20B1 20C1 20D4
OSCAR_TO_IMU_SPI_SCLK	OSCAR_TO_IMU_SPI_SCLK - @single_brd_lib.SINGLE_BRD	20D5
OSCAR_TO_IMU_SPI_SCLK_FL	OSCAR_TO_IMU_SPI_SCLK_FL - @single_brd_lib.SINGLE_BRD	20A5 20B1 20C1 20D4
OSCAR_TO_PMU_HOST_WAKE	OSCAR_TO_PMU_HOST_WAKE - @single_brd_lib.SINGLE_BRD	3C5 13B4 20C7
OSCAR_TO_RADIO_CONTEXT_A	OSCAR_TO_RADIO_CONTEXT_A - @single_brd_lib.SINGLE_BRD	20C5 23A6
	OSCAR_CONTEXT_A - @single_brd_lib.RADIO_MLB(i624_page 23)	44A8 48B2 65B3
OSCAR_TO_RADIO_CONTEXT_B	OSCAR_TO_RADIO_CONTEXT_B - @single_brd_lib.SINGLE_BRD	20C5 23A6
	OSCAR_CONTEXT_B - @single_brd_lib.RADIO_MLB(i624_page 23)	44A8 48B2 65B3
PA_NTC_N	PA_NTC_N - @single_brd_lib.SINGLE_BRD	13B7
PA_NTC_P	PA_NTC_P -	13B7

	@single_brd_lib.SINGLE_BRD	
PA_TO_PMU_NTC_P	PA_TO_PMU_NTC_P - @single_brd_lib.SINGLE_BRD	13B6
PGND_CODEC_GNDCP	PGND_CODEC_GNDCP - @single_brd_lib.SINGLE_BRD	10B5
PGND_IRLED_DRAIN	PGND_IRLED_DRAIN - @single_brd_lib.SINGLE_BRD	11B4
PGND_IRLED_K	PGND_IRLED_K - @single_brd_lib.SINGLE_BRD	11C4
PGND_MIC1_TO_CODEC_RET	PGND_MIC1_TO_CODEC_RET - @single_brd_lib.SINGLE_BRD	10B8 17B8
PGND_MIC1_TO_CODEC_RET_FILT	PGND_MIC1_TO_CODEC_RET_FILT - @single_brd_lib.SINGLE_BRD	10B7
PGND_MIC2_3_TO_CODEC_RET	PGND_MIC2_3_TO_CODEC_RET - @single_brd_lib.SINGLE_BRD	8C2 10A8 11C4
PGND_MIC2_3_TO_CODEC_RET_FILT	PGND_MIC2_3_TO_CODEC_RET_FILT - @single_brd_lib.SINGLE_BRD	10B7
PGND_OPEL	PGND_OPEL - @single_brd_lib.SINGLE_BRD	15A4 15A4
PGND_RCAM_AF_RET	PGND_RCAM_AF_RET - @single_brd_lib.SINGLE_BRD	12B1 21C4
PGND_SCREW_HOLE1	PGND_SCREW_HOLE1 - @single_brd_lib.SINGLE_BRD	22A7
PGND_STANDOFF1	PGND_STANDOFF1 - @single_brd_lib.SINGLE_BRD	22A6
PGND_STANDOFF2	PGND_STANDOFF2 - @single_brd_lib.SINGLE_BRD	22A6
PGND_STROBE_RETURN	PGND_STROBE_RETURN - @single_brd_lib.SINGLE_BRD	8D7 15A4
PMU_ACT_DIO	PMU_ACT_DIO - @single_brd_lib.SINGLE_BRD	12C6
PMU_TO_AP_IRQ_L	PMU_TO_AP_IRQ_L - @single_brd_lib.SINGLE_BRD	3C8 13B6
PMU_TO_BB_RST_L	PMU_TO_BB_RST_L - @single_brd_lib.SINGLE_BRD	13B3 23D6
	RESET_PMU_L - @single_brd_lib.RADIO_MLB(i624_page 23)	44D3 44D8 46C8
PMU_TO_BB_RST_R_L	PMU_TO_BB_RST_R_L - @single_brd_lib.SINGLE_BRD	13B4
PMU_TO_BB_VBUS_DET	PMU_TO_BB_VBUS_DET - @single_brd_lib.SINGLE_BRD	13B4 23C6
	BB_USB_VBUS - @single_brd_lib.RADIO_MLB(i624_page 23)	44C3 44C8 47A5
PMU_TO_BT_REG_ON	PMU_TO_BT_REG_ON - @single_brd_lib.SINGLE_BRD	13B3 23B6
	BT_REG_ON - @single_brd_lib.RADIO_MLB(i624_page 23)	44B8 44C1 65C6
PMU_TO_BT_REG_ON_R	PMU_TO_BT_REG_ON_R - @single_brd_lib.SINGLE_BRD	13B4
PMU_TO_TP_AMUX_AY	PMU_TO_TP_AMUX_AY - @single_brd_lib.SINGLE_BRD	13C6 22C4
PMU_TO_TP_AMUX_BY	PMU_TO_TP_AMUX_BY - @single_brd_lib.SINGLE_BRD	13B6 22C4
PMU_TO_WLAN_REG_ON	PMU_TO_WLAN_REG_ON - @single_brd_lib.SINGLE_BRD	13B3 23C6
	WLAN_REG_ON - @single_brd_lib.RADIO_MLB(i624_page 23)	44C1 44C8 65C6
PMU_TO_WLAN_REG_ON_R	PMU_TO_WLAN_REG_ON_R - @single_brd_lib.SINGLE_BRD	13B4
PN5V7_LCM_AVDDN	PN5V7_LCM_AVDDN - @single_brd_lib.SINGLE_BRD	19C5
PN5V7_SAGE_AVDDN	PN5V7_SAGE_AVDDN - @single_brd_lib.SINGLE_BRD	14C3 18D4 19D2
PN5V7_SAGE_AVDDN_FILT	PN5V7_SAGE_AVDDN_FILT - @single_brd_lib.SINGLE_BRD	18D3
PP1V0	PP1V0 - @single_brd_lib.SINGLE_BRD	2C3 7C3 7D8 12A2
PP1V0_SOC	PP1V0_SOC - @single_brd_lib.SINGLE_BRD	4D6 12C3
PP1V0_SRAM	PP1V0_SRAM - @single_brd_lib.SINGLE_BRD	5C3 12C1
PP1V1_CPU	PP1V1_CPU - @single_brd_lib.SINGLE_BRD	4D3 12D3
PP1V1_GPU	PP1V1_GPU - @single_brd_lib.SINGLE_BRD	4D3 12C3
PP1V2	PP1V2 - @single_brd_lib.SINGLE_BRD	2C6 4A6 4B8 5D5 12B5
PP1V2_NAND_VDDI	PP1V2_NAND_VDDI - @single_brd_lib.SINGLE_BRD	6D4
PP1V2_OSCAR	PP1V2_OSCAR - @single_brd_lib.SINGLE_BRD	12B5 20D7
PP1V2_OSCAR_VDDC	PP1V2_OSCAR_VDDC - @single_brd_lib.SINGLE_BRD	20D6
PP1V2_RCAM_CONN	PP1V2_RCAM_CONN - @single_brd_lib.SINGLE_BRD	21B4
PP1V2_RCAM_SWITCHOUT	PP1V2_RCAM_SWITCHOUT - @single_brd_lib.SINGLE_BRD	21C6
PP1V2_SDRAM	PP1V2_SDRAM - @single_brd_lib.SINGLE_BRD	4A8 4C8 4D8 12B7 12D1 21C7
PP1V8	PP1V8 - @single_brd_lib.SINGLE_BRD	2B7 2C6 3A6 3B1 3B1 3B5 3B8 3D1 5A3 5B5 6C8 6D1 7C2 7C4 7D5 10C7 11C2 12B5 14B7 16B4 18D1 19C2 19D2 21C7
PP1V8_ALWAYS	PP1V8_ALWAYS - @single_brd_lib.SINGLE_BRD	3A4 3B4 12A2
PP1V8_COMP	PP1V8_COMP - @single_brd_lib.SINGLE_BRD	20A7 20B6
PP1V8_CUMULUS_VDDLDO	PP1V8_CUMULUS_VDDLDO - @single_brd_lib.SINGLE_BRD	18B7 18D6
PP1V8_FCAM_CONN	PP1V8_FCAM_CONN - @single_brd_lib.SINGLE_BRD	11C4
PP1V8_GRAPE	PP1V8_GRAPE - @single_brd_lib.SINGLE_BRD	12B5 18A3 18B5 18D5
PP1V8_LCM_CONN	PP1V8_LCM_CONN - @single_brd_lib.SINGLE_BRD	19C5
PP1V8_OSCAR	PP1V8_OSCAR - @single_brd_lib.SINGLE_BRD	12B5 20B1 20B5 20C8 20D1 20D5
PP1V8_OSCAR_VDDIO	PP1V8_OSCAR_VDDIO - @single_brd_lib.SINGLE_BRD	20D6
PP1V8_PLL	PP1V8_PLL - @single_brd_lib.SINGLE_BRD	2C5
PP1V8_RCAM_CONN	PP1V8_RCAM_CONN - @single_brd_lib.SINGLE_BRD	21B4
PP1V8_SDRAM	PP1V8_SDRAM - @single_brd_lib.SINGLE_BRD	3C8 4B8 10C3 10C7 12D1 14B7 16D4 17D7 23D6
	PP_WL_BT_VDDIO_AP - @single_brd_lib.RADIO_MLB(i624_page 23)	44C8 65C3
PP1V8_SDRAM_DOCK_CONN	PP1V8_SDRAM_DOCK_CONN - @single_brd_lib.SINGLE_BRD	17C5
PP1V8_VA_L19_L67	PP1V8_VA_L19_L67 -	10C7 12A2 15D4

	@single_brd_lib.SINGLE_BRD	
PP1V8_XTAL	PP1V8_XTAL - @single_brd_lib.SINGLE_BRD	5A4
PP2V5_RCAM_AF	PP2V5_RCAM_AF - @single_brd_lib.SINGLE_BRD	12A2 12B2 21D7
PP2V5_RCAM_AF_COMP	PP2V5_RCAM_AF_COMP - @single_brd_lib.SINGLE_BRD	12B1 21D7
PP2V5_RCAM_AF_CONN	PP2V5_RCAM_AF_CONN - @single_brd_lib.SINGLE_BRD	21C4
PP2V8_CAM_AVDD	PP2V8_CAM_AVDD - @single_brd_lib.SINGLE_BRD	11D2 12A2 21B7
PP2V8_FCAM_CONN	PP2V8_FCAM_CONN - @single_brd_lib.SINGLE_BRD	11C4
PP2V8_RCAM_CONN	PP2V8_RCAM_CONN - @single_brd_lib.SINGLE_BRD	21B4
PP3V0_ACC	PP3V0_ACC - @single_brd_lib.SINGLE_BRD	12A2 16D3
PP3V0_ALS	PP3V0_ALS - @single_brd_lib.SINGLE_BRD	11C5
PP3V0_COMP	PP3V0_COMP - @single_brd_lib.SINGLE_BRD	20B7
PP3V0_IMU	PP3V0_IMU - @single_brd_lib.SINGLE_BRD	12A2 20B3 20B7 20D3
PP3V0_NAND	PP3V0_NAND - @single_brd_lib.SINGLE_BRD	6D1 12A2
PP3V0_NAND_XW	PP3V0_NAND_XW - @single_brd_lib.SINGLE_BRD	6D3
PP3V0_NAVAJO	PP3V0_NAVAJO - @single_brd_lib.SINGLE_BRD	12A2 17D1
PP3V0_NAVAJO_CONN	PP3V0_NAVAJO_CONN - @single_brd_lib.SINGLE_BRD	17C4
PP3V0_PROX	PP3V0_PROX - @single_brd_lib.SINGLE_BRD	11C6
PP3V0_PROX_ALS	PP3V0_PROX_ALS - @single_brd_lib.SINGLE_BRD	11B8 11C8 12A2
PP3V0_PROX_IRLED	PP3V0_PROX_IRLED - @single_brd_lib.SINGLE_BRD	11A2 12A2
PP3V0_SDRAM	PP3V0_SDRAM - @single_brd_lib.SINGLE_BRD	8C7 12A2 16D6
PP3V3_USB	PP3V3_USB - @single_brd_lib.SINGLE_BRD	2C3 12B2
PP5V0_USB_CONN	PP5V0_USB_CONN - @single_brd_lib.SINGLE_BRD	17A6 22D4
PP5V0_USB_PROT	PP5V0_USB_PROT - @single_brd_lib.SINGLE_BRD	12D8 16D1 17A8
PP5V1_GRAPE_VDDH	PP5V1_GRAPE_VDDH - @single_brd_lib.SINGLE_BRD	14C3 18D7
PP5V7_LCM_AVDDH	PP5V7_LCM_AVDDH - @single_brd_lib.SINGLE_BRD	14C3 19D2
PP5V7_LCM_AVDDH_CONN	PP5V7_LCM_AVDDH_CONN - @single_brd_lib.SINGLE_BRD	19C5
PP5V7_SAGE_AVDDH	PP5V7_SAGE_AVDDH - @single_brd_lib.SINGLE_BRD	14C3 18B4 18D3
PP6V0_LCM_BOOST	PP6V0_LCM_BOOST - @single_brd_lib.SINGLE_BRD	14C4
PP18V0_MESA	PP18V0_MESA - @single_brd_lib.SINGLE_BRD	14B1 17D7
PP18V0_MESA_DOCK_CONN	PP18V0_MESA_DOCK_CONN - @single_brd_lib.SINGLE_BRD	17C5
PP18V0_MESA_SW	PP18V0_MESA_SW - @single_brd_lib.SINGLE_BRD	14B3
PP_BATT_VCC	PP_BATT_VCC - @single_brd_lib.SINGLE_BRD	12C8 15B7 15D7 22D4 22D5 22D8 23D6
	PP_BATT_VCC_CONN - @single_brd_lib.RADIO_MLB(i624_page 23)	44D1 44D8 45C8 53D7 54D5 55C5 56D6 57C5 58C6
PP_BATT_VCC_L19_VP	PP_BATT_VCC_L19_VP - @single_brd_lib.SINGLE_BRD	15D6
PP_BUCK0_LX0	PP_BUCK0_LX0 - @single_brd_lib.SINGLE_BRD	12D5
PP_BUCK0_LX1	PP_BUCK0_LX1 - @single_brd_lib.SINGLE_BRD	12D5
PP_BUCK0_LX2	PP_BUCK0_LX2 - @single_brd_lib.SINGLE_BRD	12C5
PP_BUCK0_LX3	PP_BUCK0_LX3 - @single_brd_lib.SINGLE_BRD	12C5
PP_BUCK1_LX0	PP_BUCK1_LX0 - @single_brd_lib.SINGLE_BRD	12C5
PP_BUCK1_LX1	PP_BUCK1_LX1 - @single_brd_lib.SINGLE_BRD	12C5
PP_BUCK2_LX	PP_BUCK2_LX - @single_brd_lib.SINGLE_BRD	12C5
PP_BUCK3_LX	PP_BUCK3_LX - @single_brd_lib.SINGLE_BRD	12C5
PP_BUCK4_LX	PP_BUCK4_LX - @single_brd_lib.SINGLE_BRD	12B5
PP_BUCK5_LX	PP_BUCK5_LX - @single_brd_lib.SINGLE_BRD	12B5
PP_CHESTNUT_CN	PP_CHESTNUT_CN - @single_brd_lib.SINGLE_BRD	14D4
PP_CHESTNUT_CP	PP_CHESTNUT_CP - @single_brd_lib.SINGLE_BRD	14D4
PP_CHESTNUT_LXP	PP_CHESTNUT_LXP - @single_brd_lib.SINGLE_BRD	14D6
PP_CODEC_FILT+	PP_CODEC_FILT+ - @single_brd_lib.SINGLE_BRD	10B5
PP_CODEC_SPKR_VQ	PP_CODEC_SPKR_VQ - @single_brd_lib.SINGLE_BRD	10B5
PP_CODEC_TO_MIC1_BIAS	PP_CODEC_TO_MIC1_BIAS - @single_brd_lib.SINGLE_BRD	10B7 17B8
PP_CODEC_TO_MIC1_BIAS_CONN	PP_CODEC_TO_MIC1_BIAS_CONN - @single_brd_lib.SINGLE_BRD	17B6
PP_CODEC_TO_MIC2_3_BIAS	PP_CODEC_TO_MIC2_3_BIAS - @single_brd_lib.SINGLE_BRD	8C2 10B7 11B2
PP_CODEC_TO_MIC3_BIAS_CONN	PP_CODEC_TO_MIC3_BIAS_CONN - @single_brd_lib.SINGLE_BRD	11C4
PP_CODEC_VCPFILT+	PP_CODEC_VCPFILT+ - @single_brd_lib.SINGLE_BRD	10C5
PP_CODEC_VCPFILT-	PP_CODEC_VCPFILT- - @single_brd_lib.SINGLE_BRD	10B5
PP_CODEC_VHP_FLYC	PP_CODEC_VHP_FLYC - @single_brd_lib.SINGLE_BRD	10C5
PP_CODEC_VHP_FLYN	PP_CODEC_VHP_FLYN - @single_brd_lib.SINGLE_BRD	10C5
PP_CODEC_VHP_FLYP	PP_CODEC_VHP_FLYP - @single_brd_lib.SINGLE_BRD	10C5
PP_CUMULUS_VDDANA	PP_CUMULUS_VDDANA - @single_brd_lib.SINGLE_BRD	18C7
PP_CUMULUS_VDDCORE	PP_CUMULUS_VDDCORE - @single_brd_lib.SINGLE_BRD	18C7
PP_E75_TO_TRISTAR_ACC1	PP_E75_TO_TRISTAR_ACC1 - @single_brd_lib.SINGLE_BRD	16D2 17A1
PP_E75_TO_TRISTAR_ACC1_CONN	PP_E75_TO_TRISTAR_ACC1_CONN - @single_brd_lib.SINGLE_BRD	17B4 22C3

PP_E75_TO_TRISTAR_ACC2	PP_E75_TO_TRISTAR_ACC2 - @single_brd_lib.SINGLE_BRD	16D2 17A1
PP_E75_TO_TRISTAR_ACC2_CONN	PP_E75_TO_TRISTAR_ACC2_CONN - @single_brd_lib.SINGLE_BRD	17B4 22C3
PP_EXTMIC_BIAS	PP_EXTMIC_BIAS - @single_brd_lib.SINGLE_BRD	10B7
PP_EXTMIC_BIAS_FILT	PP_EXTMIC_BIAS_FILT - @single_brd_lib.SINGLE_BRD	10B7
PP_EXTMIC_BIAS_FILT_IN	PP_EXTMIC_BIAS_FILT_IN - @single_brd_lib.SINGLE_BRD	10B7
PP_EXTMIC_BIAS_IN	PP_EXTMIC_BIAS_IN - @single_brd_lib.SINGLE_BRD	10B7
PP_L19_VBOOST	PP_L19_VBOOST - @single_brd_lib.SINGLE_BRD	15D6
PP_LCM_BL_ANODE	PP_LCM_BL_ANODE - @single_brd_lib.SINGLE_BRD	14B5 19B2
PP_LCM_BL_ANODE_CONN	PP_LCM_BL_ANODE_CONN - @single_brd_lib.SINGLE_BRD	19C5 22A5
PP_LCM_BL_CAT1	PP_LCM_BL_CAT1 - @single_brd_lib.SINGLE_BRD	14B6 19A2
PP_LCM_BL_CAT1_CONN	PP_LCM_BL_CAT1_CONN - @single_brd_lib.SINGLE_BRD	19C5 22A5
PP_LCM_BL_CAT2	PP_LCM_BL_CAT2 - @single_brd_lib.SINGLE_BRD	14B6 19A2
PP_LCM_BL_CAT2_CONN	PP_LCM_BL_CAT2_CONN - @single_brd_lib.SINGLE_BRD	19C5 22A5
PP_LDO14_2P65	PP_LDO14_2P65 - @single_brd_lib.SINGLE_BRD	17A7 23D6
	PP_LDO14_2V65 - @single_brd_lib.RADIO_MLB(i624_page 23)	44B8 45B1 52B6 53B4 53D4 59C6 59D3 60D4 62D1 62D3
PP_LED_BOOST_OUT	PP_LED_BOOST_OUT - @single_brd_lib.SINGLE_BRD	15B5
PP_LED_DRV_LX	PP_LED_DRV_LX - @single_brd_lib.SINGLE_BRD	15B5
PP_MIPI0D_VREG	PP_MIPI0D_VREG - @single_brd_lib.SINGLE_BRD	7D6
PP_MIPI1D_VREG	PP_MIPI1D_VREG - @single_brd_lib.SINGLE_BRD	7D6
PP_PMU_TO_VIBE	PP_PMU_TO_VIBE - @single_brd_lib.SINGLE_BRD	8C7 12B7
PP_PMU_TO_VIBE_CONN	PP_PMU_TO_VIBE_CONN - @single_brd_lib.SINGLE_BRD	8C6
PP_PMU_VCENTER	PP_PMU_VCENTER - @single_brd_lib.SINGLE_BRD	12D7
PP_PMU_VDD_REF	PP_PMU_VDD_REF - @single_brd_lib.SINGLE_BRD	13C4
PP_PMU_VDD_RTC	PP_PMU_VDD_RTC - @single_brd_lib.SINGLE_BRD	13C4
PP_PMU_VREF	PP_PMU_VREF - @single_brd_lib.SINGLE_BRD	13C4
PP_PMU_VSW_CHG	PP_PMU_VSW_CHG - @single_brd_lib.SINGLE_BRD	12C7
PP_SAGE_LX	PP_SAGE_LX - @single_brd_lib.SINGLE_BRD	18B3
PP_SAGE_LY	PP_SAGE_LY - @single_brd_lib.SINGLE_BRD	18B3
PP_SAGE_TO_TOUCH_VCPH	PP_SAGE_TO_TOUCH_VCPH - @single_brd_lib.SINGLE_BRD	18A5 18D3
PP_SAGE_TO_TOUCH_VCPH_CONN	PP_SAGE_TO_TOUCH_VCPH_CONN - @single_brd_lib.SINGLE_BRD	18A6 18A8
PP_SAGE_TO_TOUCH_VCPL	PP_SAGE_TO_TOUCH_VCPL - @single_brd_lib.SINGLE_BRD	18A5 18D5 19C7
PP_SAGE_TO_TOUCH_VCPL_CONN	PP_SAGE_TO_TOUCH_VCPL_CONN - @single_brd_lib.SINGLE_BRD	18A6 18A8
PP_SAGE_VBST_OUTH	PP_SAGE_VBST_OUTH - @single_brd_lib.SINGLE_BRD	18B3
PP_SAGE_VBST_OUTL	PP_SAGE_VBST_OUTL - @single_brd_lib.SINGLE_BRD	18B3
PP_SAGE_VCPL_F	PP_SAGE_VCPL_F - @single_brd_lib.SINGLE_BRD	18B4 18D1
PP_SPKAMP_FILT	PP_SPKAMP_FILT - @single_brd_lib.SINGLE_BRD	15C5
PP_SPKAMP_LDO_FILT	PP_SPKAMP_LDO_FILT - @single_brd_lib.SINGLE_BRD	15C5
PP_SPKAMP_SW	PP_SPKAMP_SW - @single_brd_lib.SINGLE_BRD	15C6
PP_STRB_DRIVER_TO_LED_COOL	PP_STRB_DRIVER_TO_LED_COOL - @single_brd_lib.SINGLE_BRD	8B2 15A3
PP_STRB_DRIVER_TO_LED_WARM	PP_STRB_DRIVER_TO_LED_WARM - @single_brd_lib.SINGLE_BRD	8D7 15A3
PP_VCC_MAIN	PP_VCC_MAIN - @single_brd_lib.SINGLE_BRD	10D7 12A8 12B7 12C8 13C2 14B4 14B8 14D6 23D6
	PP_VCC_MAIN_WLAN - @single_brd_lib.RADIO_MLB(i624_page 23)	44D8 65D6
PP_VCC_MAIN_CODEC	PP_VCC_MAIN_CODEC - @single_brd_lib.SINGLE_BRD	10D7
PP_WLED_LX	PP_WLED_LX - @single_brd_lib.SINGLE_BRD	14B7
RADIO_TO_PMU_ADC_LDO6_RUIM_1V8	RADIO_TO_PMU_ADC_LDO6_RUIM_1V8 - @single_brd_lib.SINGLE_BRD	13C6 23C6
	ADC_LDO6_RUIM_1V8 - @single_brd_lib.RADIO_MLB(i624_page 23)	44A7 44B8
RADIO_TO_PMU_ADC_LVS1	RADIO_TO_PMU_ADC_LVS1 - @single_brd_lib.SINGLE_BRD	13C6 23C6
	ADC_LVS1 - @single_brd_lib.RADIO_MLB(i624_page 23)	44A7 44A8
RADIO_TO_PMU_ADC_SMPS1_MSMC_1V05	RADIO_TO_PMU_ADC_SMPS1_MSMC_1V05 - @single_brd_lib.SINGLE_BRD	13C6 23C6
	ADC_SMPS1_MSMC_1V05 - @single_brd_lib.RADIO_MLB(i624_page 23)	44A7 44B8
RADIO_TO_PMU_ADC_SMPS3_MSME_1V8	RADIO_TO_PMU_ADC_SMPS3_MSME_1V8 - @single_brd_lib.SINGLE_BRD	13C6 23C6
	ADC_SMPS3_MSME_1V8 - @single_brd_lib.RADIO_MLB(i624_page 23)	44A7 44B8
RCAM_TO_LEDDRV_STROBE_EN	RCAM_TO_LEDDRV_STROBE_EN - @single_brd_lib.SINGLE_BRD	15A6 21A7
RCAM_TO_LEDDRV_STROBE_EN_CONN	RCAM_TO_LEDDRV_STROBE_EN_CONN - @single_brd_lib.SINGLE_BRD	21B4
RCAM_TO_STROBE_NTC	RCAM_TO_STROBE_NTC - @single_brd_lib.SINGLE_BRD	8D2 15A3
RCAM_TO_STROBE_NTC_CONN	RCAM_TO_STROBE_NTC_CONN - @single_brd_lib.SINGLE_BRD	8D3
RCVR_TO_CODEC_RCVR_TEST	RCVR_TO_CODEC_RCVR_TEST - @single_brd_lib.SINGLE_BRD	9A7 11A7
RCVR_TO_CODEC_RCVR_TEST_L67	RCVR_TO_CODEC_RCVR_TEST_L67 - @single_brd_lib.SINGLE_BRD	9C5
RESET_1V8_L	RESET_1V8_L - @single_brd_lib.SINGLE_BRD	2B7 4D8 13B6 14C6 16C2 19B2 22B4 23D6

	RF_RESET_L - @single_brd_lib.RADIO_MLB(i624_page 23)	44C3 44D8
REVERSE_GATE	REVERSE_GATE - @single_brd_lib.SINGLE_BRD	17A7
SAGE_DUMP_GATE	SAGE_DUMP_GATE - @single_brd_lib.SINGLE_BRD	18C4
SAGE_TO_CUMULUS_IN<0>	SAGE_TO_CUMULUS_IN<0> - @single_brd_lib.SINGLE_BRD	18C1 18C7
SAGE_TO_CUMULUS_IN<1>	SAGE_TO_CUMULUS_IN<1> - @single_brd_lib.SINGLE_BRD	18C1 18C7
SAGE_TO_CUMULUS_IN<2>	SAGE_TO_CUMULUS_IN<2> - @single_brd_lib.SINGLE_BRD	18C1 18C7
SAGE_TO_CUMULUS_IN<3>	SAGE_TO_CUMULUS_IN<3> - @single_brd_lib.SINGLE_BRD	18C7 18D1
SAGE_TO_CUMULUS_IN<4>	SAGE_TO_CUMULUS_IN<4> - @single_brd_lib.SINGLE_BRD	18C7 18D1
SAGE_TO_CUMULUS_IN<5>	SAGE_TO_CUMULUS_IN<5> - @single_brd_lib.SINGLE_BRD	18C7 18D1
SAGE_TO_CUMULUS_IN<6>	SAGE_TO_CUMULUS_IN<6> - @single_brd_lib.SINGLE_BRD	18C1 18C7
SAGE_TO_CUMULUS_IN<7>	SAGE_TO_CUMULUS_IN<7> - @single_brd_lib.SINGLE_BRD	18C1 18C7
SAGE_TO_CUMULUS_IN<8>	SAGE_TO_CUMULUS_IN<8> - @single_brd_lib.SINGLE_BRD	18C1 18C7
SAGE_TO_CUMULUS_IN<9>	SAGE_TO_CUMULUS_IN<9> - @single_brd_lib.SINGLE_BRD	18C1 18C7
SAGE_TO_CUMULUS_IN<10>	SAGE_TO_CUMULUS_IN<10> - @single_brd_lib.SINGLE_BRD	18C1 18C7
SAGE_TO_CUMULUS_IN<11>	SAGE_TO_CUMULUS_IN<11> - @single_brd_lib.SINGLE_BRD	18C1 18C7
SAGE_TO_CUMULUS_IN<12>	SAGE_TO_CUMULUS_IN<12> - @single_brd_lib.SINGLE_BRD	18B7 18C1
SAGE_TO_CUMULUS_IN<13>	SAGE_TO_CUMULUS_IN<13> - @single_brd_lib.SINGLE_BRD	18C1 18C7
SAGE_TO_CUMULUS_IN<14>	SAGE_TO_CUMULUS_IN<14> - @single_brd_lib.SINGLE_BRD	18C1 18C7
SAGE_TO_TOUCH_VCPH_REF	SAGE_TO_TOUCH_VCPH_REF - @single_brd_lib.SINGLE_BRD	18A5 18B4
SAGE_TO_TOUCH_VCPH_REF_CONN	SAGE_TO_TOUCH_VCPH_REF_CONN - @single_brd_lib.SINGLE_BRD	18A6 18A7
SAGE_TO_TOUCH_VCPL_LCM_CONN	SAGE_TO_TOUCH_VCPL_LCM_CONN - @single_brd_lib.SINGLE_BRD	19C6
SAGE_TO_TOUCH_VCPL_REF	SAGE_TO_TOUCH_VCPL_REF - @single_brd_lib.SINGLE_BRD	18A5 18B4
SAGE_TO_TOUCH_VCPL_REF_CONN	SAGE_TO_TOUCH_VCPL_REF_CONN - @single_brd_lib.SINGLE_BRD	18A6 18A7
SAGE_TO_TOUCH_VSTM_OUT<0>	SAGE_TO_TOUCH_VSTM_OUT<0> - @single_brd_lib.SINGLE_BRD	18A7 18A8 18B1
SAGE_TO_TOUCH_VSTM_OUT<1>	SAGE_TO_TOUCH_VSTM_OUT<1> - @single_brd_lib.SINGLE_BRD	18A8 18C1
SAGE_TO_TOUCH_VSTM_OUT<2>	SAGE_TO_TOUCH_VSTM_OUT<2> - @single_brd_lib.SINGLE_BRD	18A8 18B1
SAGE_TO_TOUCH_VSTM_OUT<3>	SAGE_TO_TOUCH_VSTM_OUT<3> - @single_brd_lib.SINGLE_BRD	18A8 18B1
SAGE_TO_TOUCH_VSTM_OUT<4>	SAGE_TO_TOUCH_VSTM_OUT<4> - @single_brd_lib.SINGLE_BRD	18A8 18C1
SAGE_TO_TOUCH_VSTM_OUT<5>	SAGE_TO_TOUCH_VSTM_OUT<5> - @single_brd_lib.SINGLE_BRD	18A8 18C1
SAGE_TO_TOUCH_VSTM_OUT<6>	SAGE_TO_TOUCH_VSTM_OUT<6> - @single_brd_lib.SINGLE_BRD	18A8 18C1
SAGE_TO_TOUCH_VSTM_OUT<7>	SAGE_TO_TOUCH_VSTM_OUT<7> - @single_brd_lib.SINGLE_BRD	18A8 18C1
SAGE_TO_TOUCH_VSTM_OUT<8>	SAGE_TO_TOUCH_VSTM_OUT<8> - @single_brd_lib.SINGLE_BRD	18A8 18C1
SAGE_TO_TOUCH_VSTM_OUT<9>	SAGE_TO_TOUCH_VSTM_OUT<9> - @single_brd_lib.SINGLE_BRD	18A8 18C1
SAGE_TO_TOUCH_VSTM_OUT<10>	SAGE_TO_TOUCH_VSTM_OUT<10> - @single_brd_lib.SINGLE_BRD	18A8 18C1
SAGE_TO_TOUCH_VSTM_OUT<11>	SAGE_TO_TOUCH_VSTM_OUT<11> - @single_brd_lib.SINGLE_BRD	18A7 18B1
SAGE_TO_TOUCH_VSTM_OUT<12>	SAGE_TO_TOUCH_VSTM_OUT<12> - @single_brd_lib.SINGLE_BRD	18A7 18C1
SAGE_TO_TOUCH_VSTM_OUT<13>	SAGE_TO_TOUCH_VSTM_OUT<13> - @single_brd_lib.SINGLE_BRD	18A7 18C1
SAGE_TO_TOUCH_VSTM_OUT<14>	SAGE_TO_TOUCH_VSTM_OUT<14> - @single_brd_lib.SINGLE_BRD	18A7 18C1
SAGE_TO_TOUCH_VSTM_OUT<15>	SAGE_TO_TOUCH_VSTM_OUT<15> - @single_brd_lib.SINGLE_BRD	18A7 18C1
SAGE_TO_TOUCH_VSTM_OUT<16>	SAGE_TO_TOUCH_VSTM_OUT<16> - @single_brd_lib.SINGLE_BRD	18A7 18B1
SAGE_TO_TOUCH_VSTM_OUT<17>	SAGE_TO_TOUCH_VSTM_OUT<17> - @single_brd_lib.SINGLE_BRD	18A7 18B1
SAGE_TO_TOUCH_VSTM_OUT<18>	SAGE_TO_TOUCH_VSTM_OUT<18> - @single_brd_lib.SINGLE_BRD	18A7 18C1
SAGE_TO_TOUCH_VSTM_OUT<19>	SAGE_TO_TOUCH_VSTM_OUT<19> - @single_brd_lib.SINGLE_BRD	18A7 18C1
SAGE_VBIAS	SAGE_VBIAS - @single_brd_lib.SINGLE_BRD	18B3
SAGE_VBIAS_DRAIN	SAGE_VBIAS_DRAIN - @single_brd_lib.SINGLE_BRD	18C5
SPEAKER_TO_SPKAMP_ISENSE_N	SPEAKER_TO_SPKAMP_ISENSE_N - @single_brd_lib.SINGLE_BRD	15C5
SPEAKER_TO_SPKAMP_ISENSE_P	SPEAKER_TO_SPKAMP_ISENSE_P - @single_brd_lib.SINGLE_BRD	15C5
SPEAKER_TO_SPKAMP_VSENSE_N	SPEAKER_TO_SPKAMP_VSENSE_N - @single_brd_lib.SINGLE_BRD	15C2 17A7
SPEAKER_TO_SPKAMP_VSENSE_P	SPEAKER_TO_SPKAMP_VSENSE_P - @single_brd_lib.SINGLE_BRD	15C2 17A7
SPKAMP_IREF	SPKAMP_IREF - @single_brd_lib.SINGLE_BRD	15C5
SPKAMP_TO_AP_INT_L	SPKAMP_TO_AP_INT_L - @single_brd_lib.SINGLE_BRD	3D8 15C6
SPKAMP_TO_SPEAKER_OUT_CONN_N	SPKAMP_TO_SPEAKER_OUT_CONN_N - @single_brd_lib.SINGLE_BRD	15C1 17A7
SPKAMP_TO_SPEAKER_OUT_CONN_P	SPKAMP_TO_SPEAKER_OUT_CONN_P - @single_brd_lib.SINGLE_BRD	15C1 17A7 17C5
SPKAMP_TO_SPEAKER_OUT_N	SPKAMP_TO_SPEAKER_OUT_N - @single_brd_lib.SINGLE_BRD	15C5
SPKAMP_TO_SPEAKER_OUT_P	SPKAMP_TO_SPEAKER_OUT_P - @single_brd_lib.SINGLE_BRD	15C5
SPKR_FLTR_P	SPKR_FLTR_P - @single_brd_lib.SINGLE_BRD	15C3
SPKR_SNS_N	SPKR_SNS_N - @single_brd_lib.SINGLE_BRD	15C3
SPKR_SNS_P	SPKR_SNS_P - @single_brd_lib.SINGLE_BRD	15C3
TOUCH_TO_AP_INT_L	TOUCH_TO_AP_INT_L - @single_brd_lib.SINGLE_BRD	3C8 18B8
TOUCH_TO_AP_SPI1_MISO	TOUCH_TO_AP_SPI1_MISO - @single_brd_lib.SINGLE_BRD	3B4 18B8
TOUCH_TO_AP_SPI1_MISO_R	TOUCH_TO_AP_SPI1_MISO_R - @single_brd_lib.SINGLE_BRD	18B7
TOUCH_TO_SAGE_SENSE_	TOUCH_TO_SAGE_SENSE_IN<0> -	18A8 18C3

IN<0>	@single_brd_lib.SINGLE_BRD	
TOUCH_TO_SAGE_SENSE_IN<1>	@single_brd_lib.SINGLE_BRD	18A8 18C3
TOUCH_TO_SAGE_SENSE_IN<2>	@single_brd_lib.SINGLE_BRD	18A8 18C3
TOUCH_TO_SAGE_SENSE_IN<3>	@single_brd_lib.SINGLE_BRD	18A8 18D3
TOUCH_TO_SAGE_SENSE_IN<4>	@single_brd_lib.SINGLE_BRD	18A8 18D3
TOUCH_TO_SAGE_SENSE_IN<5>	@single_brd_lib.SINGLE_BRD	18A8 18D3
TOUCH_TO_SAGE_SENSE_IN<6>	@single_brd_lib.SINGLE_BRD	18A7 18C3
TOUCH_TO_SAGE_SENSE_IN<7>	@single_brd_lib.SINGLE_BRD	18A7 18C3
TOUCH_TO_SAGE_SENSE_IN<8>	@single_brd_lib.SINGLE_BRD	18A7 18C3
TOUCH_TO_SAGE_SENSE_IN<9>	@single_brd_lib.SINGLE_BRD	18A7 18C3
TOUCH_TO_SAGE_SENSE_IN<10>	@single_brd_lib.SINGLE_BRD	18A8 18C3
TOUCH_TO_SAGE_SENSE_IN<11>	@single_brd_lib.SINGLE_BRD	18A8 18C3
TOUCH_TO_SAGE_SENSE_IN<12>	@single_brd_lib.SINGLE_BRD	18A7 18C3
TOUCH_TO_SAGE_SENSE_IN<13>	@single_brd_lib.SINGLE_BRD	18A7 18C3
TOUCH_TO_SAGE_SENSE_IN<14>	@single_brd_lib.SINGLE_BRD	18A7 18C3
TOUCH_TO_SAGE_VCM_IN	TOUCH_TO_SAGE_VCM_IN - @single_brd_lib.SINGLE_BRD	18A5 18B1
TOUCH_TO_SAGE_VCM_IN_CONN	TOUCH_TO_SAGE_VCM_IN_CONN - @single_brd_lib.SINGLE_BRD	18A6 18A7
TRISTAR_BI_AP_JTAG_SWDIO	TRISTAR_BI_AP_JTAG_SWDIO - @single_brd_lib.SINGLE_BRD	2B6 16C4
TRISTAR_BYPASS	TRISTAR_BYPASS - @single_brd_lib.SINGLE_BRD	16C3
TRISTAR_TO_AP_ACC_UART6_RXD	TRISTAR_TO_AP_ACC_UART6_RXD - @single_brd_lib.SINGLE_BRD	3B5 16C4
TRISTAR_TO_AP_DEBUG_UART0_RXD	TRISTAR_TO_AP_DEBUG_UART0_RXD - @single_brd_lib.SINGLE_BRD	3C5 16C4
TRISTAR_TO_AP_INT	TRISTAR_TO_AP_INT - @single_brd_lib.SINGLE_BRD	3C5 13B4 16C2
TRISTAR_TO_AP_JTAG_SWCLK	TRISTAR_TO_AP_JTAG_SWCLK - @single_brd_lib.SINGLE_BRD	2B6 16C4
TRISTAR_TO_PMU_HOST_RESET	TRISTAR_TO_PMU_HOST_RESET - @single_brd_lib.SINGLE_BRD	13B6 16C1
TRISTAR_TO_PMU_MIKEYBUS_TEST_NEG	TRISTAR_TO_PMU_MIKEYBUS_TEST_NEG - @single_brd_lib.SINGLE_BRD	13C6 16C6
TRISTAR_TO_PMU_MIKEYBUS_TEST_POS	TRISTAR_TO_PMU_MIKEYBUS_TEST_POS - @single_brd_lib.SINGLE_BRD	13C6 16D6
TRISTAR_TO_PMU_OVP_SW_EN_L	TRISTAR_TO_PMU_OVP_SW_EN_L - @single_brd_lib.SINGLE_BRD	12D7 16C1
TRISTAR_TO_PMU_USB_BRICKID	TRISTAR_TO_PMU_USB_BRICKID - @single_brd_lib.SINGLE_BRD	13C2 16C4
TRISTAR_TO_PMU_USB_BRICKID_R	TRISTAR_TO_PMU_USB_BRICKID_R - @single_brd_lib.SINGLE_BRD	13C4 13C6
U12_GPIO_3	U12_GPIO_3 - @single_brd_lib.SINGLE_BRD	18B6
USB_CONN_SNUB	USB_CONN_SNUB - @single_brd_lib.SINGLE_BRD	17A6
USB_REXT	USB_REXT - @single_brd_lib.SINGLE_BRD	2B4
USB_VBUS_DETECT	USB_VBUS_DETECT - @single_brd_lib.SINGLE_BRD	2B3 12D8
WLAN_TO_AP_HSIC2_RDY	WLAN_TO_AP_HSIC2_RDY - @single_brd_lib.SINGLE_BRD	3C2 23B6
	WLAN_HSIC3_DEVICE_RDY - @single_brd_lib.RADIO_MLB(i624_page23)	44C6 44C8 65B3
WLAN_TO_AP_HSIC2_REMOTE_WAKE	WLAN_TO_AP_HSIC2_REMOTE_WAKE - @single_brd_lib.SINGLE_BRD	3C2 23B6
	WLAN_HSIC3_RESUME - @single_brd_lib.RADIO_MLB(i624_page23)	44C6 44D8 65B3
WLAN_TO_AP_UART3_RXD	WLAN_TO_AP_UART3_RXD - @single_brd_lib.SINGLE_BRD	3C5 23C6
	WLAN_UART_TXD - @single_brd_lib.RADIO_MLB(i624_page23)	44C8 65B3
WLAN_TO_PMU_HOST_WAKE	WLAN_TO_PMU_HOST_WAKE - @single_brd_lib.SINGLE_BRD	13B4 23C6
	HOST_WAKE_WLAN - @single_brd_lib.RADIO_MLB(i624_page23)	44C8 65B3

Base nets and synonyms for single_brd_lib.RADIO_MLB(@single_brd_lib.single_brd(sch_1):page23_i624@radio_mlb_lib.radio_mlb(sch_1))

Base Signal	Synonyms	Location([Zone][dir])
3P4T_SEL_0	3P4T_SEL_0 - @single_brd_lib.RADIO_MLB	48C2 53C1 53D4
3P4T_SEL_1	3P4T_SEL_1 - @single_brd_lib.RADIO_MLB	48C2 53B1 53D4 59C3
19P2M_CLK_EN	19P2M_CLK_EN - @single_brd_lib.RADIO_MLB	46B2 47A5
19P2M_MDM	19P2M_MDM - @single_brd_lib.RADIO_MLB	46B2 47A5
19P2M_WTR	19P2M_WTR - @single_brd_lib.RADIO_MLB	46B2 49C5
19P2M_WTR_FILT_IN	19P2M_WTR_FILT_IN - @single_brd_lib.RADIO_MLB	49C5
19P2M_WTR_IN	19P2M_WTR_IN - @single_brd_lib.RADIO_MLB	49C4
19P2M_XTAL_IN	19P2M_XTAL_IN - @single_brd_lib.RADIO_MLB	46B4
19P2M_XTAL_OUT	19P2M_XTAL_OUT - @single_brd_lib.RADIO_MLB	46B4
50_ASM_ANT	50_ASM_ANT - @single_brd_lib.RADIO_MLB	59B4
50_ASM_ANT_MCH	50_ASM_ANT_MCH - @single_brd_lib.RADIO_MLB	59B4
50_B1_ANT	50_B1_ANT - @single_brd_lib.RADIO_MLB	53A1 59B7
50_B1_B3_TX_SAW_IN	50_B1_B3_TX_SAW_IN - @single_brd_lib.RADIO_MLB	52C4
50_B1_PA_IN	50_B1_PA_IN - @single_brd_lib.RADIO_MLB	53C7
50_B1_PA_OUT	50_B1_PA_OUT - @single_brd_lib.RADIO_MLB	53B6
50_B1_PA_OUT_MATCH	50_B1_PA_OUT_MATCH - @single_brd_lib.RADIO_MLB	53B4
50_B1_RX_MOD_ANT	50_B1_RX_MOD_ANT -	53A3
50_B1_TX_SAW_MATCH	@single_brd_lib.RADIO_MLB 50_B1_TX_SAW_MATCH - @single_brd_lib.RADIO_MLB	52D2
50_B1_TX_SAW_OUT	50_B1_TX_SAW_OUT - @single_brd_lib.RADIO_MLB	52D1 53C8
50_B2_ANT	50_B2_ANT - @single_brd_lib.RADIO_MLB	54C2 59B7
50_B2_B3_CPL_IN	50_B2_B3_CPL_IN - @single_brd_lib.RADIO_MLB	54C3 55C2
50_B2_DPLX_ANT	50_B2_DPLX_ANT - @single_brd_lib.RADIO_MLB	54C4
50_B2_DPLX_ANT_MATCH	50_B2_DPLX_ANT_MATCH - @single_brd_lib.RADIO_MLB	54C3
50_B2_DUPLX_RX	50_B2_DUPLX_RX - @single_brd_lib.RADIO_MLB	51C7 54C5
50_B2_RX_BALUN	50_B2_RX_BALUN - @single_brd_lib.RADIO_MLB	51C7
50_B2_TX_PAD_IN	50_B2_TX_PAD_IN - @single_brd_lib.RADIO_MLB	54C6
50_B2_TX_SAW_IN	50_B2_TX_SAW_IN - @single_brd_lib.RADIO_MLB	52D7
50_B2_TX_SAW_OUT	50_B2_TX_SAW_OUT - @single_brd_lib.RADIO_MLB	52D5 54C7
50_B3_ANT	50_B3_ANT - @single_brd_lib.RADIO_MLB	54C2 59B7
50_B3_DPLX_ANT	50_B3_DPLX_ANT - @single_brd_lib.RADIO_MLB	54C4
50_B3_DPLX_ANT_MATCH	50_B3_DPLX_ANT_MATCH - @single_brd_lib.RADIO_MLB	54C3
50_B3_DUPLX_RX	50_B3_DUPLX_RX - @single_brd_lib.RADIO_MLB	51C7 54C5
50_B3_RX_BALUN	50_B3_RX_BALUN - @single_brd_lib.RADIO_MLB	51B7
50_B3_TX_PAD_IN	50_B3_TX_PAD_IN - @single_brd_lib.RADIO_MLB	54C6
50_B3_TX_SAW_MATCH	50_B3_TX_SAW_MATCH - @single_brd_lib.RADIO_MLB	52C2
50_B3_TX_SAW_OUT	50_B3_TX_SAW_OUT - @single_brd_lib.RADIO_MLB	52C1 54C7
50_B5_ANT	50_B5_ANT - @single_brd_lib.RADIO_MLB	56C2 59B7
50_B5_B8_CPL_IN	50_B5_B8_CPL_IN - @single_brd_lib.RADIO_MLB	53C4 56D3
50_B5_B18_TX_SAW_IN	50_B5_B18_TX_SAW_IN - @single_brd_lib.RADIO_MLB	52D7
50_B5_DPLX_ANT	50_B5_DPLX_ANT - @single_brd_lib.RADIO_MLB	56C3
50_B5_TX_PAD_IN	50_B5_TX_PAD_IN - @single_brd_lib.RADIO_MLB	56C6
50_B5_TX_SAW_OUT	50_B5_TX_SAW_OUT - @single_brd_lib.RADIO_MLB	52D5 56C7
50_B7_ANT	50_B7_ANT - @single_brd_lib.RADIO_MLB	55B2 59B7
50_B7_B38_B40_PRX_BALUN_IN	50_B7_B38_B40_PRX_BALUN_IN - @single_brd_lib.RADIO_MLB	51C5 53D1
50_B7_B38_B40_SPDT	50_B7_B38_B40_SPDT - @single_brd_lib.RADIO_MLB	62C3
50_B7_DPLX_ANT	50_B7_DPLX_ANT - @single_brd_lib.RADIO_MLB	55B3
50_B7_DUPLX_RX	50_B7_DUPLX_RX - @single_brd_lib.RADIO_MLB	53D1 55B4
50_B7_RX_SP3T_IN	50_B7_RX_SP3T_IN - @single_brd_lib.RADIO_MLB	53D2
50_B7_TX_FILT_IN	50_B7_TX_FILT_IN - @single_brd_lib.RADIO_MLB	52B4 55C8
50_B7_TX_FILT_MATCH	50_B7_TX_FILT_MATCH - @single_brd_lib.RADIO_MLB	55C7
50_B7_TX_FILT_OUT	50_B7_TX_FILT_OUT - @single_brd_lib.RADIO_MLB	55C6
50_B7_TX_PAD_IN	50_B7_TX_PAD_IN - @single_brd_lib.RADIO_MLB	55C5
50_B7_TX_SPDT_OUT	50_B7_TX_SPDT_OUT - @single_brd_lib.RADIO_MLB	52B5
50_B8_ANT	50_B8_ANT - @single_brd_lib.RADIO_MLB	56C2 59B7
50_B8_DPLX_ANT	50_B8_DPLX_ANT - @single_brd_lib.RADIO_MLB	56C3
50_B8_TX_PAD_IN	50_B8_TX_PAD_IN - @single_brd_lib.RADIO_MLB	56C6
50_B8_TX_SAW_IN	50_B8_TX_SAW_IN - @single_brd_lib.RADIO_MLB	52C7
50_B8_TX_SAW_OUT	50_B8_TX_SAW_OUT - @single_brd_lib.RADIO_MLB	52C5 56C7
50_B20_ANT	50_B20_ANT - @single_brd_lib.RADIO_MLB	55C1 59B7
50_B20_DPLX_ANT	50_B20_DPLX_ANT - @single_brd_lib.RADIO_MLB	55C3
50_B20_TX_PAD_IN	50_B20_TX_PAD_IN - @single_brd_lib.RADIO_MLB	55C5
50_B20_TX_SAW_IN	50_B20_TX_SAW_IN - @single_brd_lib.RADIO_MLB	52C5 55C8
50_B20_TX_SAW_MATCH	50_B20_TX_SAW_MATCH - @single_brd_lib.RADIO_MLB	55C8
50_B20_TX_SAW_OUT	50_B20_TX_SAW_OUT - @single_brd_lib.RADIO_MLB	55C6
50_B34_B39_PA_FILT_IN	50_B34_B39_PA_FILT_IN - @single_brd_lib.RADIO_MLB	53C4
50_B34_B39_PA_FILT_OUT	50_B34_B39_PA_FILT_OUT - @single_brd_lib.RADIO_MLB	53C3
50_B34_B39_PA_OUT	50_B34_B39_PA_OUT - @single_brd_lib.RADIO_MLB	53C4
50_B34_B39_RX_ASM	50_B34_B39_RX_ASM - @single_brd_lib.RADIO_MLB	53B1 59B7
50_B34_B39_TX_ASM	50_B34_B39_TX_ASM - @single_brd_lib.RADIO_MLB	53C1 59B7
50_B34_B39_TX_FILT_IN	50_B34_B39_TX_FILT_IN - @single_brd_lib.RADIO_MLB	52D4
50_B34_PA_IN	50_B34_PA_IN - @single_brd_lib.RADIO_MLB	53C7
50_B34_TX_SAW_OUT	50_B34_TX_SAW_OUT - @single_brd_lib.RADIO_MLB	52D1 53C8
50_B38_B40_DRX_AUX2_OUT	50_B38_B40_DRX_AUX2_OUT - @single_brd_lib.RADIO_MLB	60A7
50_B38_B40_DRX_FILT_IN	50_B38_B40_DRX_FILT_IN - @single_brd_lib.RADIO_MLB	60A6
50_B38_B40_PA_IN	50_B38_B40_PA_IN - @single_brd_lib.RADIO_MLB	53B7
50_B38_B40_SPDT	50_B38_B40_SPDT - @single_brd_lib.RADIO_MLB	51B2 59C2
50_B38_B40_TX_FILT_ANT	50_B38_B40_TX_FILT_ANT - @single_brd_lib.RADIO_MLB	51B3
50_B38_B40_TX_MATCH	50_B38_B40_TX_MATCH - @single_brd_lib.RADIO_MLB	53B7
50_B38_B40_TX_SPDT_MATCH	50_B38_B40_TX_SPDT_MATCH -	52B4 53B8
ATCH	@single_brd_lib.RADIO_MLB	
50_B38_B40_TX_SPDT_OUT	50_B38_B40_TX_SPDT_OUT - @single_brd_lib.RADIO_MLB	52B5
50_B38_DRX_FILT_OUT	50_B38_DRX_FILT_OUT - @single_brd_lib.RADIO_MLB	60A5
50_B38_DRX_MOD_IN	50_B38_DRX_MOD_IN - @single_brd_lib.RADIO_MLB	60B4
50_B38_FILTER	50_B38_FILTER - @single_brd_lib.RADIO_MLB	51B5 53D1
50_B38_FILTER_MATCH	50_B38_FILTER_MATCH - @single_brd_lib.RADIO_MLB	51B4
50_B38_PA_MATCH	50_B38_PA_MATCH - @single_brd_lib.RADIO_MLB	53D4
50_B38_PA_OUT	50_B38_PA_OUT - @single_brd_lib.RADIO_MLB	53D4
50_B39_PA_IN	50_B39_PA_IN - @single_brd_lib.RADIO_MLB	53C7
50_B39_TX_SAW_OUT	50_B39_TX_SAW_OUT - @single_brd_lib.RADIO_MLB	52D1 53C8
50_B40_DRX_FILT_OUT	50_B40_DRX_FILT_OUT - @single_brd_lib.RADIO_MLB	60A5
50_B40_DRX_MOD_IN	50_B40_DRX_MOD_IN - @single_brd_lib.RADIO_MLB	60A4
50_B40_FILTER	50_B40_FILTER - @single_brd_lib.RADIO_MLB	51A5 53D1
50_B40_FILTER_MATCH	50_B40_FILTER_MATCH - @single_brd_lib.RADIO_MLB	51A4
50_B40_PA_MATCH	50_B40_PA_MATCH - @single_brd_lib.RADIO_MLB	53C4
50_B40_PA_OUT	50_B40_PA_OUT - @single_brd_lib.RADIO_MLB	53C4
50_DCS_RX_ASM	50_DCS_RX_ASM - @single_brd_lib.RADIO_MLB	53B1 59B7
50_DIVERSITY_SWITCH_MATCH	50_DIVERSITY_SWITCH_MATCH - @single_brd_lib.RADIO_MLB	60C4
50_DRX_ANT	50_DRX_ANT - @single_brd_lib.RADIO_MLB	59B4 60D6
50_DRX_ASM_MCH	50_DRX_ASM_MCH - @single_brd_lib.RADIO_MLB	60D6
50_DRX_MOD_TERM	50_DRX_MOD_TERM - @single_brd_lib.RADIO_MLB	60C3
50_EXTRACTOR_CELL	50_EXTRACTOR_CELL - @single_brd_lib.RADIO_MLB	62C3
50_EXTRACTOR_DIPLEX_1	50_EXTRACTOR_DIPLEX_1 - @single_brd_lib.RADIO_MLB	62B5
50_EXTRACTOR_WIFI	50_EXTRACTOR_WIFI - @single_brd_lib.RADIO_MLB	62C4
50_FULL_B40_FILTER	50_FULL_B40_FILTER - @single_brd_lib.RADIO_MLB	51A5 53D1
50_FULL_B40_FILTER_MATCH	50_FULL_B40_FILTER_MATCH - @single_brd_lib.RADIO_MLB	51A4
50_FULL_B40_SPDT	50_FULL_B40_SPDT - @single_brd_lib.RADIO_MLB	51A2 59C2
50_FULL_B40_SPDT_MATCH	50_FULL_B40_SPDT_MATCH - @single_brd_lib.RADIO_MLB	51A3
50_GPS_ANT	50_GPS_ANT - @single_brd_lib.RADIO_MLB	61B7
50_GPS_ANT_CONN	50_GPS_ANT_CONN - @single_brd_lib.RADIO_MLB	61B6
50_GPS_ANT_FEED	50_GPS_ANT_FEED - @single_brd_lib.RADIO_MLB	61B5
50_GPS_DRX_MOD_IN	50_GPS_DRX_MOD_IN - @single_brd_lib.RADIO_MLB	60C4
50_GPS_LNA_OUT	50_GPS_LNA_OUT - @single_brd_lib.RADIO_MLB	60B6 61B3
50_HSIC_BB_DATA	50_AP_BI_BB_HSIC1_DATA - @single_brd_lib.SINGLE_BRD	2B6 23B6
	50_HSIC_BB_DATA - @single_brd_lib.RADIO_MLB	44B1 44B6 44C8 47B3
50_HSIC_BB_STROBE	50_AP_BI_BB_HSIC1_STB - @single_brd_lib.SINGLE_BRD	2B6 23B6
	50_HSIC_BB_STROBE - @single_brd_lib.RADIO_MLB	44B1 44B6 44C8 47B3
50_HSIC_CAL	50_HSIC_CAL - @single_brd_lib.RADIO_MLB	47B3
50_HSIC_WLAN_DATA	50_AP_BI_WLAN_HSIC2_DATA - @single_brd_lib.SINGLE_BRD	2B6 23B6
	50_HSIC_WLAN_DATA - @single_brd_lib.RADIO_MLB	44B6 44C8 65B6
50_HSIC_WLAN_STROBE	50_AP_BI_WLAN_HSIC2_STB - @single_brd_lib.SINGLE_BRD	2B6 23B6
	50_HSIC_WLAN_STROBE - @single_brd_lib.RADIO_MLB	44B6 44C8 65B6
50_LAT_COAX	50_LAT_COAX - @single_brd_lib.RADIO_MLB	62A6
50_LAT_MATCH	50_LAT_MATCH - @single_brd_lib.RADIO_MLB	62A5
50_LAT_TEST	50_LAT_TEST - @single_brd_lib.RADIO_MLB	59B3 62A3
50_MBPA_CPL_IN	50_MBPA_CPL_IN - @single_brd_lib.RADIO_MLB	53C4 54C3
50_NTCH_FILT_OUT	50_NTCH_FILT_OUT - @single_brd_lib.RADIO_MLB	62D7
50_PA_ISO	50_PA_ISO - @single_brd_lib.RADIO_MLB	55C3
50_PDET_IN	50_PDET_IN - @single_brd_lib.RADIO_MLB	49C3
50_PDET_PAD_IN	50_PDET_PAD_IN - @single_brd_lib.RADIO_MLB	49C1 56C3
50_PDET_PAD_OUT	50_PDET_PAD_OUT - @single_brd_lib.RADIO_MLB	49C2
50_RX_MOD_B34_B39_IN	50_RX_MOD_B34_B39_IN - @single_brd_lib.RADIO_MLB	53B2
50_RX_MOD_DCS_IN	50_RX_MOD_DCS_IN - @single_brd_lib.RADIO_MLB	53B2
50_TXRX_B38_B40_ASM	50_TXRX_B38_B40_ASM - @single_brd_lib.RADIO_MLB	59B5
50_TXRX_B38_B40_SPDT	50_TXRX_B38_B40_SPDT - @single_brd_lib.RADIO_MLB	59C3
50_TX_G_HB_ASM	50_TX_G_HB_ASM - @single_brd_lib.RADIO_MLB	57B2 59B4
50_TX_G_HB_MCH	50_TX_G_HB_MCH - @single_brd_lib.RADIO_MLB	57C7
50_TX_G_HB_PAIN	50_TX_G_HB_PAIN - @single_brd_lib.RADIO_MLB	57C6
50_TX_G_HB_PAOUT	50_TX_G_HB_PAOUT - @single_brd_lib.RADIO_MLB	57B4
50_TX_G_LB_ASM	50_TX_G_LB_ASM - @single_brd_lib.RADIO_MLB	57B2 59B4
50_TX_G_LB_MCH	50_TX_G_LB_MCH - @single_brd_lib.RADIO_MLB	57B7
50_TX_G_LB_PAIN	50_TX_G_LB_PAIN - @single_brd_lib.RADIO_MLB	57B6
50_TX_G_LB_PAOUT	50_TX_G_LB_PAOUT - @single_brd_lib.RADIO_MLB	57B4
50_UAT1_LPF	50_UAT1_LPF - @single_brd_lib.RADIO_MLB	62D3
50_UAT2_ANT_FD	50_UAT2_ANT_FD - @single_brd_lib.RADIO_MLB	62B8
50_UAT2_ANT_MATCH	50_UAT2_ANT_MATCH - @single_brd_lib.RADIO_MLB	62B7
50_UAT2_ANT_MATCH_T	50_UAT2_ANT_MATCH_T - @single_brd_lib.RADIO_MLB	62B7
50_UAT2_DIPLEX	50_UAT2_DIPLEX - @single_brd_lib.RADIO_MLB	62C6
50_UAT2_LPF	50_UAT2_LPF - @single_brd_lib.RADIO_MLB	62C5
50_UAT_CELL	50_UAT_CELL - @single_brd_lib.RADIO_MLB	62D4
50_UAT_COAX_DOWN	50_UAT_COAX_DOWN - @single_brd_lib.RADIO_MLB	62C2
50_UAT_COAX_UP	50_UAT_COAX_UP - @single_brd_lib.RADIO_MLB	59B4 62C1
50_UAT_TEST	50_UAT_TEST - @single_brd_lib.RADIO_MLB	62D3
50_UPPER_ANT_FEED	50_UPPER_ANT_FEED - @single_brd_lib.RADIO_MLB	62D8
50_UPPER_MCH_1	50_UPPER_MCH_1 - @single_brd_lib.RADIO_MLB	62D6
50_WLAN_A	50_WLAN_A - @single_brd_lib.RADIO_MLB	62C6 65C1
50_WLAN_A_ANT	50_WLAN_A_ANT - @single_brd_lib.RADIO_MLB	65C4
50_WLAN_G	50_WLAN_G - @single_brd_lib.RADIO_MLB	62C4 65C1
50_WLAN_G_ANT	50_WLAN_G_ANT - @single_brd_lib.RADIO_MLB	65C4
50_XCVR_2G_HB_TX	50_XCVR_2G_HB_TX - @single_brd_lib.RADIO_MLB	49D2 57C8
50_XCVR_2G_LB_TX	50_XCVR_2G_LB_TX - @single_brd_lib.RADIO_MLB	49D2 57B8
50_XCVR_B1_B3_TX	50_XCVR_B1_B3_TX - @single_brd_lib.RADIO_MLB	49D2 52C5
50_XCVR_B2_TX	50_XCVR_B2_TX - @single_brd_lib.RADIO_MLB	49D2 52D8
50_XCVR_B5_B18_TX	50_XCVR_B5_B18_TX - @single_brd_lib.RADIO_MLB	49D2 52D8
50_XCVR_B7_B38_B40_TX	50_XCVR_B7_B38_B40_TX - @single_brd_lib.RADIO_MLB	49C2 52B7
50_XCVR_B7_B38_B40_TX_MATCH	50_XCVR_B7_B38_B40_TX_MATCH - @single_brd_lib.RADIO_MLB	52B6
50_XCVR_B8_TX	50_XCVR_B8_TX - @single_brd_lib.RADIO_MLB	49D2 52C8
50_XCVR_B20_TX	50_XCVR_B20_TX - @single_brd_lib.RADIO_MLB	49D2 52C8
50_XCVR_B34_B39_TX	50_XCVR_B34_B39_TX - @single_brd_lib.RADIO_MLB	49D2 52D5
90_BB_USB_D_N	90_TRISTAR_BI_BB_USB_N - @single_brd_lib.SINGLE_BRD	16C4 23C6
	90_BB_USB_D_N - @single_brd_lib.RADIO_MLB	44C3 44C8 47A5
90_BB_USB_D_P	90_TRISTAR_BI_BB_USB_P - @single_brd_lib.SINGLE_BRD	16D4 23C6
	90_BB_USB_D_P - @single_brd_lib.RADIO_MLB	44C3 44C8 47A5
100_B5_DUPLX_RX_N	100_B5_DUPLX_RX_N - @single_brd_lib.RADIO_MLB	51C4 56C5
100_B5_DUPLX_RX_P	100_B5_DUPLX_RX_P - @single_brd_lib.RADIO_MLB	51C4 56C5
100_B7_B38_B40_PRX_BALUN_OUT_N	100_B7_B38_B40_PRX_BALUN_OUT_N - @single_brd_lib.RADIO_MLB	51C4
100_B7_B38_B40_PRX_BALUN_OUT_P	100_B7_B38_B40_PRX_BALUN_OUT_P - @single_brd_lib.RADIO_MLB	51B4
100_B7_B38_B40_PRX_MATCH_N	100_B7_B38_B40_PRX_MATCH_N - @single_brd_lib.RADIO_MLB	51C3
100_B7_B38_B40_PRX_MATCH_P	100_B7_B38_B40_PRX_MATCH_P - @single_brd_lib.RADIO_MLB	51B3
100_B8_DUPLX_RX_N	100_B8_DUPLX_RX_N - @single_brd_lib.RADIO_MLB	51D4 56C5
100_B8_DUPLX_RX_P	100_B8_DUPLX_RX_P - @single_brd_lib.RADIO_MLB	51D4 56C5
100_B20_DUPLX_RX_N	100_B20_DUPLX_RX_N - @single_brd_lib.RADIO_MLB	51B7 55B4
100_B20_DUPLX_RX_P	100_B20_DUPLX_RX_P - @single_brd_lib.RADIO_MLB	51A7 55B4
100_RX_MODULE_OUT_N	100_RX_MODULE_OUT_N - @single_brd_lib.RADIO_MLB	51D7 53B5
100_RX_MODULE_OUT_P	100_RX_MODULE_OUT_P - @single_brd_lib.RADIO_MLB	51D7 53B5
100_XCVR_B1_B2_B3_B34_B39_DRX_N	100_XCVR_B1_B2_B3_B34_B39_DRX_N - @single_brd_lib.RADIO_MLB	49C8 60C2
100_XCVR_B1_B2_B3_B34_B39_DRX_P	100_XCVR_B1_B2_B3_B34_B39_DRX_P - @single_brd_lib.RADIO_MLB	49C8 60C2
100_XCVR_B1_B34_B39_DCS_PRX_N	100_XCVR_B1_B34_B39_DCS_PRX_N - @single_brd_lib.RADIO_MLB	49C8 51D5
100_XCVR_B1_B34_B39_DCS_PRX_P	100_XCVR_B1_B34_B39_DCS_PRX_P - @single_brd_lib.RADIO_MLB	49C8 51D5
100_XCVR_B2_PRX_N	100_XCVR_B2_PRX_N - @single_brd_lib.RADIO_MLB	49C8 51C5
100_XCVR_B2_PRX_P	100_XCVR_B2_PRX_P - @single_brd_lib.RADIO_MLB	49D8 51C5
100_XCVR_B3_PRX_N	100_XCVR_B3_PRX_N - @single_brd_lib.RADIO_MLB	49C8 51C5
100_XCVR_B3_PRX_P	100_XCVR_B3_PRX_P - @single_brd_lib.RADIO_MLB	49C8 51B5
100_XCVR_B5_B18_DRX_N	100_XCVR_B5_B18_DRX_N - @single_brd_lib.RADIO_MLB	49C8 60C2
100_XCVR_B5_B18_DRX_P	100_XCVR_B5_B18_DRX_P - @single_brd_lib.RADIO_MLB	49C8 60C2
100_XCVR_B5_B18_PRX_N	100_XCVR_B5_B18_PRX_N - @single_brd_lib.RADIO_MLB	49D8 51C3
100_XCVR_B5_B18_PRX_P	100_XCVR_B5_B18_PRX_P - @single_brd_lib.RADIO_MLB	49D8 51C3
100_XCVR_B7_B38_B40_DRX_N	100_XCVR_B7_B38_B40_DRX_N - @single_brd_lib.RADIO_MLB	49C8 60C2
100_XCVR_B7_B38_B40_DRX_P	100_XCVR_B7_B38_B40_DRX_P - @single_brd_lib.RADIO_MLB	49C8 60C2
100_XCVR_B7_B38_B40_PRX_N	100_XCVR_B7_B38_B40_PRX_N - @single_brd_lib.RADIO_MLB	49C8 51C2
100_XCVR_B7_B38_B40_PRX_P	100_XCVR_B7_B38_B40_PRX_P - @single_brd_lib.RADIO_MLB	49C8 51B2
100_XCVR_B8_B20_DRX_N	100_XCVR_B8_B20_DRX_N - @single_brd_lib.RADIO_MLB	49C8 60C2
100_XCVR_B8_B20_DRX_P	100_XCVR_B8_B20_DRX_P - @single_brd_lib.RADIO_MLB	49C8 60C2
100_XCVR_B8_PRX_N	100_XCVR_B8_PRX_N - @single_brd_lib.RADIO_MLB	49D8 51D3
100_XCVR_B8_PRX_P	100_XCVR_B8_PRX_P -	49D8 51D3

	@single_brd_lib.RADIO_MLB	
100_XCVR_B20_PRX_N	100_XCVR_B20_PRX_N -	49D8 51B5
	@single_brd_lib.RADIO_MLB	
100_XCVR_B20_PRX_P	100_XCVR_B20_PRX_P -	49D8 51A5
	@single_brd_lib.RADIO_MLB	
100_XCVR_GPS_RX_MATCH_N	100_XCVR_GPS_RX_MATCH_N -	60C4
	@single_brd_lib.RADIO_MLB	
100_XCVR_GPS_RX_MATCH_P	100_XCVR_GPS_RX_MATCH_P -	60C4
	@single_brd_lib.RADIO_MLB	
100_XCVR_GPS_RX_N	100_XCVR_GPS_RX_N -	49B8 60C6
	@single_brd_lib.RADIO_MLB	
100_XCVR_GPS_RX_P	100_XCVR_GPS_RX_P -	49B8 60B6
	@single_brd_lib.RADIO_MLB	
ADC_LDO6_RUIM_1V8	RADIO_TO_PMU_ADC_LDO6_RUIM_1V8 -	13C6 23C6
	@single_brd_lib.SINGLE_BRD	
	ADC_LDO6_RUIM_1V8 -	44A7 44B8
	@single_brd_lib.RADIO_MLB	
ADC_LVS1	RADIO_TO_PMU_ADC_LVS1 -	13C6 23C6
	@single_brd_lib.SINGLE_BRD	
	ADC_LVS1 -	44A7 44A8
	@single_brd_lib.RADIO_MLB	
ADC_SMPS1_MSMC_1V05	RADIO_TO_PMU_ADC_SMPS1_MSMC_1V05 -	13C6 23C6
	@single_brd_lib.SINGLE_BRD	
	ADC_SMPS1_MSMC_1V05 -	44A7 44B8
	@single_brd_lib.RADIO_MLB	
ADC_SMPS3_MSME_1V8	RADIO_TO_PMU_ADC_SMPS3_MSME_1V8 -	13C6 23C6
	@single_brd_lib.SINGLE_BRD	
	ADC_SMPS3_MSME_1V8 -	44A7 44B8
	@single_brd_lib.RADIO_MLB	
ANT_SEL_0	ANT_SEL_0 -	48C2 53D4 59B3 60C6
	@single_brd_lib.RADIO_MLB	
ANT_SEL_1	ANT_SEL_1 -	44C3 48C2 53D4 59B3 60C6
	@single_brd_lib.RADIO_MLB	
ANT_SEL_2	ANT_SEL_2 -	44C1 48C2 59B3 60C6
	@single_brd_lib.RADIO_MLB	
ANT_SEL_3	ANT_SEL_3 -	48C2 59B3 60C6
	@single_brd_lib.RADIO_MLB	
ANT_SEL_4	ANT_SEL_4 -	48C2 59B3
	@single_brd_lib.RADIO_MLB	
AP_HSIC1_RDY	AP_TO_BB_HSIC1_RDY -	3C2 23B6
	@single_brd_lib.SINGLE_BRD	
	AP_HSIC1_RDY -	44C1 44C8 48B2
	@single_brd_lib.RADIO_MLB	
AP_HSIC3_RDY	AP_TO_WLAN_HSIC2_RDY -	3C2 23B6
	@single_brd_lib.SINGLE_BRD	
	AP_HSIC3_RDY -	44C6 44C8 65B3
	@single_brd_lib.RADIO_MLB	
AP_WAKE_MODEM	AP_TO_BB_WAKE_MODEM -	3C8 23B6
	@single_brd_lib.SINGLE_BRD	
	AP_WAKE_MODEM -	44D8 48B4
	@single_brd_lib.RADIO_MLB	
BB_ERROR_FLAG	BB_ERROR_FLAG -	44D6 48B2
	@single_brd_lib.RADIO_MLB	
BB_HSIC1_REMOTE_WAKE	BB_TO_AP_HSIC1_REMOTE_WAKE -	3C2 23B6
	@single_brd_lib.SINGLE_BRD	
	BB_HSIC1_REMOTE_WAKE -	44C8 48B2
	@single_brd_lib.RADIO_MLB	
BB_I2S2_CLK	BB_I2S2_CLK -	44A8 48B4
	@single_brd_lib.RADIO_MLB	
BB_I2S2_RXD	BB_I2S2_RXD -	44A8 48B4
	@single_brd_lib.RADIO_MLB	
BB_I2S2_WS	BB_I2S2_WS -	44A8 48B4
	@single_brd_lib.RADIO_MLB	
BB_I2S_CLK	45_AP_TO_BB_I2S1_BCLK -	3C4 23C6
	@single_brd_lib.SINGLE_BRD	
	BB_I2S_CLK -	44B6 44C8 48B4
	@single_brd_lib.RADIO_MLB	
BB_I2S_MCLK	BB_I2S_MCLK -	44A8 48B4
	@single_brd_lib.RADIO_MLB	
BB_I2S_RXD	AP_TO_BB_I2S1_DOUT -	3C4 23C6
	@single_brd_lib.SINGLE_BRD	
	BB_I2S_RXD -	44B6 44C8 48B4
	@single_brd_lib.RADIO_MLB	
BB_I2S_TXD	BB_TO_AP_I2S1_DIN -	3C4 23C6
	@single_brd_lib.SINGLE_BRD	
	BB_I2S_TXD -	44A6 44C8 48B4
	@single_brd_lib.RADIO_MLB	
BB_I2S_WS	AP_TO_BB_I2S1_LRCLK -	3C4 23C6
	@single_brd_lib.SINGLE_BRD	
	BB_I2S_WS -	44B6 44C8 48B4
	@single_brd_lib.RADIO_MLB	
BB_IPC_GPIO	BB_TO_AP_IPC_GPIO -	7C8 23A6
	@single_brd_lib.SINGLE_BRD	
	BB_IPC_GPIO -	44A8 48B2
	@single_brd_lib.RADIO_MLB	
BB_JTAG_RTCLK	BB_JTAG_RTCLK -	44C3 47B3
	@single_brd_lib.RADIO_MLB	
BB_JTAG_TCK	AP_TO_BB_JTAG_TCK -	3B7 23D3
	@single_brd_lib.SINGLE_BRD	
	BB_JTAG_TCK -	44B8 44C3 47B5
	@single_brd_lib.RADIO_MLB	
BB_JTAG_TDI	AP_TO_BB_JTAG_TDI -	3C7 23D3
	@single_brd_lib.SINGLE_BRD	
	BB_JTAG_TDI -	44B8 44C3 47B5
	@single_brd_lib.RADIO_MLB	
BB_JTAG_TDO	BB_TO_AP_JTAG_TDO -	3C7 23D3
	@single_brd_lib.SINGLE_BRD	
	BB_JTAG_TDO -	44B8 44C3 47B3
	@single_brd_lib.RADIO_MLB	
BB_JTAG_TMS	AP_TO_BB_JTAG_TMS -	3B7 23D3
	@single_brd_lib.SINGLE_BRD	
	BB_JTAG_TMS -	44B8 44C3 47B5
	@single_brd_lib.RADIO_MLB	
BB_JTAG_TRST_L	AP_TO_BB_JTAG_TRST_L -	3D5 23D3
	@single_brd_lib.SINGLE_BRD	
	BB_JTAG_TRST_L -	44B8 44C3 47B5
	@single_brd_lib.RADIO_MLB	
BB_PDM	BB_PDM - @single_brd_lib.RADIO_MLB	48B2 58C7
BB_PDM_FILT	BB_PDM_FILT -	58C6
	@single_brd_lib.RADIO_MLB	
BB_RST_L	AP_TO_BB_RST_L -	3C8 23D6
	@single_brd_lib.SINGLE_BRD	
	BB_RST_L -	44C1 44D8 46C8
	@single_brd_lib.RADIO_MLB	
BB_SPI_TO_PAC_CLK	BB_TO_ANTENNA_PAC_SPI_SCLK -	8C2 23A6
	@single_brd_lib.SINGLE_BRD	
	BB_SPI_TO_PAC_CLK -	44B8 48C4 62C7
	@single_brd_lib.RADIO_MLB	
BB_SPI_TO_PAC_CLK_FILT	BB_SPI_TO_PAC_CLK_FILT -	62C6
	@single_brd_lib.RADIO_MLB	
BB_SPI_TO_PAC_CS	BB_TO_ANTENNA_PAC_SPI_CS -	8B2 23A6
	@single_brd_lib.SINGLE_BRD	
	BB_SPI_TO_PAC_CS -	44B8 48C4 62D7
	@single_brd_lib.RADIO_MLB	

BB_SPI_TO_PAC_CS_FILT	BB_SPI_TO_PAC_CS_FILT -	62D6
	@single_brd_lib.RADIO_MLB	
BB_SPI_TO_PAC_DATA_MOSI	BB_TO_ANTENNA_PAC_SPI_MOSI -	8B2 23A6
	@single_brd_lib.SINGLE_BRD	
	BB_SPI_TO_PAC_DATA_MOSI -	44B8 48C4 62C7
	@single_brd_lib.RADIO_MLB	
BB_SPI_TO_PAC_DATA_MOSI_FILT	BB_SPI_TO_PAC_DATA_MOSI_FILT -	62C6
	@single_brd_lib.RADIO_MLB	
BB_UART_CTS_L	AP_TO_BB_UART4_RTS_L -	3C5 23C6
	@single_brd_lib.SINGLE_BRD	
	BB_UART_CTS_L -	44C3 44C8 48C4
	@single_brd_lib.RADIO_MLB	
BB_UART_RTS_L	BB_TO_AP_UART4_CTS_L -	3C5 23C6
	@single_brd_lib.SINGLE_BRD	
	BB_UART_RTS_L -	44C3 44C8 48C4
	@single_brd_lib.RADIO_MLB	
BB_UART_RXD	AP_TO_BB_UART4_TXD -	3C5 16C4 23C6
	@single_brd_lib.SINGLE_BRD	
	BB_UART_RXD -	44C3 44C8 48C4
	@single_brd_lib.RADIO_MLB	
BB_UART_TXD	BB_TO_AP_UART4_RXD -	3C5 16C4 23C6
	@single_brd_lib.SINGLE_BRD	
	BB_UART_TXD -	44C3 44C8 48C4
	@single_brd_lib.RADIO_MLB	
BB_USB_VBUS	PMU_TO_BB_VBUS_DET -	13B4 23C6
	@single_brd_lib.SINGLE_BRD	
	BB_USB_VBUS -	44C3 44C8 47A5
	@single_brd_lib.RADIO_MLB	
BOARD_ID	BOARD_ID -	46D4
	@single_brd_lib.RADIO_MLB	
BS_SP2T_CTL	BS_SP2T_CTL -	48B2 62B1
	@single_brd_lib.RADIO_MLB	
BT_PCM_CLK	45_AP_TO_BT_I2S3_BCLK -	3C4 23B6
	@single_brd_lib.SINGLE_BRD	
	BT_PCM_CLK -	44B8 65B3
	@single_brd_lib.RADIO_MLB	
BT_PCM_IN	AP_TO_BT_I2S3_DOUT -	3C4 23B6
	@single_brd_lib.SINGLE_BRD	
	BT_PCM_IN -	44B8 65B3
	@single_brd_lib.RADIO_MLB	
BT_PCM_OUT	BT_TO_AP_I2S3_DIN -	3C4 23B6
	@single_brd_lib.SINGLE_BRD	
	BT_PCM_OUT -	44B8 65B3
	@single_brd_lib.RADIO_MLB	
BT_PCM_SYNC	AP_TO_BT_I2S3_LRCLK -	3C4 23B6
	@single_brd_lib.SINGLE_BRD	
	BT_PCM_SYNC -	44B8 65B3
	@single_brd_lib.RADIO_MLB	
BT_REG_ON	PMU_TO_BT_REG_ON -	13B3 23B6
	@single_brd_lib.SINGLE_BRD	
	BT_REG_ON -	44B8 44C1 65C6
	@single_brd_lib.RADIO_MLB	
BT_UART_CTS_L	AP_TO_BT_UART1_RTS_L -	3C5 23B6
	@single_brd_lib.SINGLE_BRD	
	BT_UART_CTS_L -	44B8 65B3
	@single_brd_lib.RADIO_MLB	
BT_UART_RTS_L	BT_TO_AP_UART1_CTS_L -	3C5 23B6
	@single_brd_lib.SINGLE_BRD	
	BT_UART_RTS_L -	44B8 65C3
	@single_brd_lib.RADIO_MLB	
BT_UART_RXD	AP_TO_BT_UART1_TXD -	3C5 23B6
	@single_brd_lib.SINGLE_BRD	
	BT_UART_RXD -	44B6 44B8 65C3
	@single_brd_lib.RADIO_MLB	
BT_UART_TXD	BT_TO_AP_UART1_RXD -	3C5 23B6
	@single_brd_lib.SINGLE_BRD	
	BT_UART_TXD -	44B6 44B8 65C3
	@single_brd_lib.RADIO_MLB	
BT_WAKE	AP_TO_BT_WAKE -	3C8 23B6
	@single_brd_lib.SINGLE_BRD	
	BT_WAKE - @single_brd_lib.RADIO_MLB	44B8 44D1 65C2
CLK32K_AP	45_PMU_TO_WLAN_CLK32K -	13B4 13C6 23D6
	@single_brd_lib.SINGLE_BRD	
	CLK32K_AP -	44C8 44D6 65C7
	@single_brd_lib.RADIO_MLB	
DCDC_ADJ	DCDC_ADJ -	58C5
	@single_brd_lib.RADIO_MLB	
DCDC_EN	DCDC_EN - @single_brd_lib.RADIO_MLB	48C2 58C5
DCDC_MODE	DCDC_MODE -	48B2 58B5
	@single_brd_lib.RADIO_MLB	
DCDC_OUT	DCDC_OUT -	58B4
	@single_brd_lib.RADIO_MLB	
DCDC_PGND	DCDC_PGND -	58B3 58B4 58C4 58C5
	@single_brd_lib.RADIO_MLB	
DEBUG_RST_L	DEBUG_RST_L -	44D3 47B5
	@single_brd_lib.RADIO_MLB	
DRX_BB_I_N	DRX_BB_I_N -	48C8 49C5
	@single_brd_lib.RADIO_MLB	
DRX_BB_I_P	DRX_BB_I_P -	48C8 49C5
	@single_brd_lib.RADIO_MLB	
DRX_BB_Q_N	DRX_BB_Q_N -	48C8 49C5
	@single_brd_lib.RADIO_MLB	
DRX_BB_Q_P	DRX_BB_Q_P -	48C8 49C5
	@single_brd_lib.RADIO_MLB	
EBI1_CAL	EBI1_CAL -	47D2
	@single_brd_lib.RADIO_MLB	
GPIO_6	GPIO_6 - @single_brd_lib.RADIO_MLB	65C5
GPIO_51	GPIO_51 - @single_brd_lib.RADIO_MLB	44C3 48C2
GPIO_DEBUG_LED	GPIO_DEBUG_LED -	44C3 48B4
	@single_brd_lib.RADIO_MLB	
GPS_BB_I_N	GPS_BB_I_N -	48C8 49B5
	@single_brd_lib.RADIO_MLB	
GPS_BB_I_P	GPS_BB_I_P -	48C8 49B5
	@single_brd_lib.RADIO_MLB	
GPS_BB_Q_N	GPS_BB_Q_N -	48C8 49B5
	@single_brd_lib.RADIO_MLB	
GPS_BB_Q_P	GPS_BB_Q_P -	48C8 49B5
	@single_brd_lib.RADIO_MLB	
GSM_PA_HB_EN	GSM_PA_HB_EN -	48B4 57B5
	@single_brd_lib.RADIO_MLB	
GSM_PA_LB_EN	GSM_PA_LB_EN -	48B4 57B5
	@single_brd_lib.RADIO_MLB	
HOST_WAKE_BB	BB_TO_PMU_HOST_WAKE -	13B4 23C6
	@single_brd_lib.SINGLE_BRD	
	HOST_WAKE_BB -	44C1 44D8 48B2
	@single_brd_lib.RADIO_MLB	
HOST_WAKE_BT	BT_TO_PMU_HOST_WAKE -	13B4 23B6
	@single_brd_lib.SINGLE_BRD	
	HOST_WAKE_BT -	44C8 65C3
	@single_brd_lib.RADIO_MLB	
HOST_WAKE_WLAN	WLAN_TO_PMU_HOST_WAKE -	13B4 23C6
	@single_brd_lib.SINGLE_BRD	
	HOST_WAKE_WLAN -	44C8 65B3
	@single_brd_lib.RADIO_MLB	

JTAG_SEL	JTAG_SEL -	65A7 65C6
	@single_brd_lib.RADIO_MLB	
LAT_SW1_CTL	BB_TO_LAT_SW1_CTL -	17B1 23A6
	@single_brd_lib.SINGLE_BRD	
	LAT_SW1_CTL -	44B8 44C1 48C2
	@single_brd_lib.RADIO_MLB	
LAT_SW2_CTL	BB_TO_LAT_SW2_CTL -	17B1 23A6
	@single_brd_lib.SINGLE_BRD	
	LAT_SW2_CTL -	44B8 48C2
	@single_brd_lib.RADIO_MLB	
LAT_SW3_CTL	BB_TO_LAT_SW3_CTL -	17B1 17C5 23A6
	@single_brd_lib.SINGLE_BRD	
	LAT_SW3_CTL -	44B8 48C2
	@single_brd_lib.RADIO_MLB	
LTE_ACTIVE	LTE_ACTIVE -	48B2 65B3
	@single_brd_lib.RADIO_MLB	
LTE_AGG_PA_ON	LTE_AGG_PA_ON -	48B4 65B4
	@single_brd_lib.RADIO_MLB	
LTE_COEX_RXD	LTE_COEX_RXD -	48B2 65A6
	@single_brd_lib.RADIO_MLB	
LTE_COEX_TXD	LTE_COEX_TXD -	44C6 48B2 65A6
	@single_brd_lib.RADIO_MLB	
OSCAR_CONTEXT_A	OSCAR_TO_RADIO_CONTEXT_A -	20C5 23A6
	@single_brd_lib.SINGLE_BRD	
	OSCAR_CONTEXT_A -	44A8 48B2 65B3
	@single_brd_lib.RADIO_MLB	
OSCAR_CONTEXT_B	OSCAR_TO_RADIO_CONTEXT_B -	20C5 23A6
	@single_brd_lib.SINGLE_BRD	
	OSCAR_CONTEXT_B -	44A8 48B2 65B3
	@single_brd_lib.RADIO_MLB	
PAC_TO_BB_SPI_DATA_MISO	ANTENNA_PAC_TO_BB_SPI_MISO -	23A6
	@single_brd_lib.SINGLE_BRD	
	PAC_TO_BB_SPI_DATA_MISO -	44B8 48C4 62D7
	@single_brd_lib.RADIO_MLB	
PAC_TO_BB_SPI_DATA_MISO_FILT	PAC_TO_BB_SPI_DATA_MISO_FILT -	62D6
	@single_brd_lib.RADIO_MLB	
PA_B5	PA_B5 - @single_brd_lib.RADIO_MLB	48B4 53D8 54D4 55C3 56D4
PA_ID	PA_ID - @single_brd_lib.RADIO_MLB	46D3
PA_MB_CTL0	PA_MB_CTL0 -	48B4 52B6 53D8
	@single_brd_lib.RADIO_MLB	
PA_MB_CTL1	PA_MB_CTL1 -	48B4 53D8
	@single_brd_lib.RADIO_MLB	
PA_ON_B2_B3	PA_ON_B2_B3 -	48B4 54D4
	@single_brd_lib.RADIO_MLB	
PA_ON_B5_B8	PA_ON_B5_B8 -	48B4 56D4
	@single_brd_lib.RADIO_MLB	
PA_ON_B7_B20	PA_ON_B7_B20 -	48B4 55C3
	@single_brd_lib.RADIO_MLB	
PA_R1	PA_R1 - @single_brd_lib.RADIO_MLB	48C2 53D8 54D4 55C3 56D4
		57B5
PBL_RUN_BB_HSIC1_RDY	BB_TO_AP_HSIC1_RDY -	3C2 23B6
	@single_brd_lib.SINGLE_BRD	
	PBL_RUN_BB_HSIC1_RDY -	44C1 44D8 48B2
	@single_brd_lib.RADIO_MLB	
PMIC_RESOUT_L	PMIC_RESOUT_L -	44C1 46C6 47B5
	@single_brd_lib.RADIO_MLB	
PMIC_SSBI	PMIC_SSBI -	44D6 46C8 47A5
	@single_brd_lib.RADIO_MLB	
PM_MDM_IRQ_L	PM_MDM_IRQ_L -	46C6 48B2
	@single_brd_lib.RADIO_MLB	
PM_USR_IRQ_L	PM_USR_IRQ_L -	46C6 48A2
	@single_brd_lib.RADIO_MLB	
PP_BATT_VCC_2G_PA	PP_BATT_VCC_2G_PA -	57C4
	@single_brd_lib.RADIO_MLB	
PP_BATT_VCC_CONN	PP_BATT_VCC -	12C8 15B7 15D7 22D4 22D5
	@single_brd_lib.SINGLE_BRD	22D8 23D6
	PP_BATT_VCC_CONN -	44D1 44D8 45C8 53D7 54D5
	@single_brd_lib.RADIO_MLB	55C5 56D6 57C5 58C6
PP_BATT_VCC_PA_DCDC	PP_BATT_VCC_PA_DCDC -	58C5
	@single_brd_lib.RADIO_MLB	
PP_BATT_VCC_WLAN	PP_BATT_VCC_WLAN -	65D5
	@single_brd_lib.RADIO_MLB	
PP_LDO1	PP_LDO1 - @single_brd_lib.RADIO_MLB	45B2
PP_LDO2_XO_HS_1V8	PP_LDO2_XO_HS_1V8 -	45B1 47B5
	@single_brd_lib.RADIO_MLB	
PP_LDO3_AMUX_1V8	PP_LDO3_AMUX_1V8 -	45B1 46B5 46D4 47B6
	@single_brd_lib.RADIO_MLB	
PP_LDO4_VDDA_3V3	PP_LDO4_VDDA_3V3 -	45B1 47B6
	@single_brd_lib.RADIO_MLB	
PP_LDO5_GPS_LNA_2V5	PP_LDO5_GPS_LNA_2V5 -	45B1 61C4
	@single_brd_lib.RADIO_MLB	
PP_LDO6_RUIM_1V8	PP_LDO6_RUIM_1V8 -	44A4 44A6 44A8 44D1 45B1
	@single_brd_lib.RADIO_MLB	47A6
PP_LDO7_DAC_1V8	PP_LDO7_DAC_1V8 -	45B1 47A6
	@single_brd_lib.RADIO_MLB	
PP_LDO8_VDDPX_1V2	PP_LDO8_VDDPX_1V2 -	45B1 47A6
	@single_brd_lib.RADIO_MLB	
PP_LDO9_PLL_1V05	PP_LDO9_PLL_1V05 -	45B1 47B6 47B8 47D8
	@single_brd_lib.RADIO_MLB	
PP_LDO10_ADSP_1V05	PP_LDO10_ADSP_1V05 -	45B1 47C6 47D7
	@single_brd_lib.RADIO_MLB	
PP_LDO11_MDSP_FW_1V05	PP_LDO11_MDSP_FW_1V05 -	45B1 47C6 47D6
	@single_brd_lib.RADIO_MLB	
PP_LDO12_MDSP_SW_1V05	PP_LDO12_MDSP_SW_1V05 -	45B1 47B6 47D7
	@single_brd_lib.RADIO_MLB	
PP_LDO13_VDDPX_2V95	PP_LDO13_VDDPX_2V95 -	45B1 47A8
	@single_brd_lib.RADIO_MLB	
PP_LDO14_2V65	PP_LDO14_2P65 -	17A7 23D6
	@single_brd_lib.SINGLE_BRD	
	PP_LDO14_2V65 -	44B8 45B1 52B6 53B4 53D4
	@single_brd_lib.RADIO_MLB	59C6 59D3 60D4 62D1 62D3
PP_LDO14_3P4T	PP_LDO14_3P4T -	53D3
	@single_brd_lib.RADIO_MLB	
PP_LDO14_PAC_2V65	PP_LDO14_PAC_2V65 -	62D5
	@single_brd_lib.RADIO_MLB	
PP_LDO14_RX_MOD	PP_LDO14_RX_MOD -	53B3
	@single_brd_lib.RADIO_MLB	
PP_LVS1	PP_LVS1 - @single_brd_lib.RADIO_MLB	44A8 45D1 47B6
PP_PA	PP_PA - @single_brd_lib.RADIO_MLB	53D7 54D5 55C5 56D6 57C5
		58B2
PP_RF1_1V3_DRX_FE	PP_RF1_1V3_DRX_FE -	50B4 50B5
	@single_brd_lib.RADIO_MLB	
	PP_RF1_1V3_DRX_LBLO -	50A5 50B4
	@single_brd_lib.RADIO_MLB	
	PP_RF1_1V3_DRX_MBLO -	50A5 50B4
	@single_brd_lib.RADIO_MLB	
	PP_RF1_1V3_GPS_DIG -	50A1 50D4
	@single_brd_lib.RADIO_MLB	
	PP_RF1_1V3_GPS_LNA -	50A1 50D4
	@single_brd_lib.RADIO_MLB	
	PP_RF1_1V3_GPS_PLL -	50A1 50D4
	@single_brd_lib.RADIO_MLB	
	PP_RF1_1V3_GPS_VCO -	50A1 50D4
	@single_brd_lib.RADIO_MLB	

	PP_RF1_1V3_JAM_DET -	50A6 50B4
	@single_brd_lib.RADIO_MLB	
	PP_RF1_1V3_PRX_FELO1 -	50B4 50B5
	@single_brd_lib.RADIO_MLB	
	PP_RF1_1V3_PRX_FELO2 -	50B4 50B6
	@single_brd_lib.RADIO_MLB	
	PP_RF1_1V3_PRX_PLL -	50A4 50D6
	@single_brd_lib.RADIO_MLB	
	PP_RF1_1V3_PRX_VCO -	50B4 50D6
	@single_brd_lib.RADIO_MLB	
	PP_RF1_1V3_SHDR_PLL -	50A4 50D6
	@single_brd_lib.RADIO_MLB	
	PP_RF1_1V3_SHDR_VCO -	50A4 50C6
	@single_brd_lib.RADIO_MLB	
	PP_RF1_1V3_TX_DA -	50B1 50C6
	@single_brd_lib.RADIO_MLB	
	PP_RF1_1V3_TX_LO -	50B1 50B6
	@single_brd_lib.RADIO_MLB	
	PP_RF1_1V3_TX_SYNTH -	50B1 50C6
	@single_brd_lib.RADIO_MLB	
	PP_RF1_1V3_TX_UPCONVERTER -	50B1 50B6
	@single_brd_lib.RADIO_MLB	
	PP_SMPS2_RF1_1V3_FILT -	50D5 50D8
	@single_brd_lib.RADIO_MLB	
	PP_RF1_1V3_TX_UPCONVERTER -	50B1 50B6
	@single_brd_lib.RADIO_MLB	
	PP_RF1_1V3_TX_SYNTH -	50B1 50C6
	@single_brd_lib.RADIO_MLB	
	PP_RF1_1V3_TX_LO -	50B1 50B6
	@single_brd_lib.RADIO_MLB	
	PP_RF1_1V3_TX_DA -	50B1 50C6
	@single_brd_lib.RADIO_MLB	
	PP_RF1_1V3_SHDR_VCO -	50A4 50C6
	@single_brd_lib.RADIO_MLB	
	PP_RF1_1V3_SHDR_PLL -	50A4 50D6
	@single_brd_lib.RADIO_MLB	
	PP_RF1_1V3_PRX_VCO -	50B4 50D6
	@single_brd_lib.RADIO_MLB	
	PP_RF1_1V3_PRX_PLL -	50A4 50D6
	@single_brd_lib.RADIO_MLB	
	PP_RF1_1V3_PRX_FELO1 -	50B4 50B5
	@single_brd_lib.RADIO_MLB	
	PP_RF1_1V3_JAM_DET -	50A6 50B4
	@single_brd_lib.RADIO_MLB	
	PP_RF1_1V3_GPS_VCO -	50A1 50D4
	@single_brd_lib.RADIO_MLB	
	PP_RF1_1V3_GPS_PLL -	50A1 50D4
	@single_brd_lib.RADIO_MLB	
	PP_RF1_1V3_GPS_LNA -	50A1 50D4
	@single_brd_lib.RADIO_MLB	
	PP_RF1_1V3_GPS_DIG -	50A1 50D4
	@single_brd_lib.RADIO_MLB	
	PP_RF1_1V3_DRX_LBLO -	50A5 50B4
	@single_brd_lib.RADIO_MLB	
PP_RF1_1V8_DIG	PP_RF1_1V8_DIG -	50A1 50C4
	@single_brd_lib.RADIO_MLB	
	PP_SMPS3_MSME_1V8 -	44A8 44D1 45B6 45C1 47A6
	@single_brd_lib.RADIO_MLB	47A6 47A6 47A8 47C6 47D7
		47D8 48B8 48C4 50C5
PP_RF2_2V05_DRX_BB	PP_RF2_2V05_DRX_BB -	50B4 50D1
	@single_brd_lib.RADIO_MLB	
	PP_RF2_2V05_PRX_BB -	50B4 50D1
	@single_brd_lib.RADIO_MLB	
	PP_RF2_2V05_PRX_VCO -	50B4 50C1
	@single_brd_lib.RADIO_MLB	
	PP_RF2_2V05_SHDR_VCO -	50A4 50C1
	@single_brd_lib.RADIO_MLB	
	PP_RF2_2V05_TX_BB -	50B1 50D1
	@single_brd_lib.RADIO_MLB	
	PP_RF2_2V05_TX_DA -	50B1 50D1
	@single_brd_lib.RADIO_MLB	
	PP_RF2_2V05_TX_PLL -	50B1 50C1
	@single_brd_lib.RADIO_MLB	
	PP_RF2_2V05_TX_VCO -	50B1 50C1
	@single_brd_lib.RADIO_MLB	
	PP_RF2_2V05_XO_FILT -	50B1 50C1
	@single_brd_lib.RADIO_MLB	
	PP_SMPS4_RF2_2V05_FILT -	50D3
	@single_brd_lib.RADIO_MLB	
	PP_RF2_2V05_XO_FILT -	50B1 50C1
	@single_brd_lib.RADIO_MLB	
	PP_RF2_2V05_TX_VCO -	50B1 50C1
	@single_brd_lib.RADIO_MLB	
	PP_RF2_2V05_TX_PLL -	50B1 50C1
	@single_brd_lib.RADIO_MLB	
	PP_RF2_2V05_TX_DA -	50B1 50D1
	@single_brd_lib.RADIO_MLB	
	PP_RF2_2V05_TX_BB -	50B1 50D1
	@single_brd_lib.RADIO_MLB	
	PP_RF2_2V05_SHDR_VCO -	50A4 50C1
	@single_brd_lib.RADIO_MLB	
	PP_RF2_2V05_PRX_VCO -	50B4 50C1
	@single_brd_lib.RADIO_MLB	
	PP_RF2_2V05_PRX_BB -	50B4 50D1
	@single_brd_lib.RADIO_MLB	
PP_SMPS1_MSMC_1V05	PP_SMPS1_MSMC_1V05 -	44A8 45D1 47C8 47C8 47D8
	@single_brd_lib.RADIO_MLB	
PP_SMPS2_RF1_1V3	PP_SMPS2_RF1_1V3 -	45D1 47A5 50D8
	@single_brd_lib.RADIO_MLB	
PP_SMPS4_RF2_2V05	PP_SMPS4_RF2_2V05 -	45B6 45C1 50D3
	@single_brd_lib.RADIO_MLB	
PP_SMPS5_DSP_1V05	PP_SMPS5_DSP_1V05 -	45B6 45C1
	@single_brd_lib.RADIO_MLB	
PP_SPI_NOR_1V8	PP_SPI_NOR_1V8 -	48B7
	@single_brd_lib.RADIO_MLB	
PP_SYNC	BB_TO_AP_PP_SYNC -	3C5 23C6
	@single_brd_lib.SINGLE_BRD	
	PP_SYNC - @single_brd_lib.RADIO_MLB	44C8 48B2
PP_VCC_MAIN_WLAN	PP_VCC_MAIN -	10D7 12A8 12B7 12C8 13C2
	@single_brd_lib.SINGLE_BRD	14B4 14B8 14D6 23D6
	PP_VCC_MAIN_WLAN -	44D8 65D6
	@single_brd_lib.RADIO_MLB	
PP_VREG	PP_VREG - @single_brd_lib.RADIO_MLB	45D2
PP_VSW_S1	PP_VSW_S1 -	45C4
	@single_brd_lib.RADIO_MLB	
PP_VSW_S2	PP_VSW_S2 -	45C4
	@single_brd_lib.RADIO_MLB	
PP_VSW_S3	PP_VSW_S3 -	45C4
	@single_brd_lib.RADIO_MLB	
PP_VSW_S4	PP_VSW_S4 -	45C4
	@single_brd_lib.RADIO_MLB	
PP_VSW_S5	PP_VSW_S5 -	45B4
	@single_brd_lib.RADIO_MLB	
PP_WLAN_VDDIO_1V8	PP_WLAN_VDDIO_1V8 -	65B7 65C4

	@single_brd_lib.RADIO_MLB	
PP_WL_BT_VDDIO_AP	PP1V8_SDRAM -	3C8 4B8 10C3 10C7 12D1
	@single_brd_lib.SINGLE_BRD	14B7 16D4 17D7 23D6
	PP_WL_BT_VDDIO_AP -	44C8 65C3
	@single_brd_lib.RADIO_MLB	
PRX_BB_I_N	PRX_BB_I_N -	48C8 49D5
	@single_brd_lib.RADIO_MLB	
PRX_BB_I_P	PRX_BB_I_P -	48C8 49D5
	@single_brd_lib.RADIO_MLB	
PRX_BB_Q_N	PRX_BB_Q_N -	48C8 49D5
	@single_brd_lib.RADIO_MLB	
PRX_BB_Q_P	PRX_BB_Q_P -	48C8 49D5
	@single_brd_lib.RADIO_MLB	
PS_HOLD	PS_HOLD - @single_brd_lib.RADIO_MLB	46C8 48B2
PS_HOLD_PMIC	PS_HOLD_PMIC -	44C3 46C7
	@single_brd_lib.RADIO_MLB	
RADIO_ON_L	AP_TO_RADIO_ON_L -	3C8 23D6
	@single_brd_lib.SINGLE_BRD	
	RADIO_ON_L -	44D3 44D8 46C8
	@single_brd_lib.RADIO_MLB	
REF_BYP	REF_BYP - @single_brd_lib.RADIO_MLB	45C5
REF_GND	REF_GND - @single_brd_lib.RADIO_MLB	45C5
RESET_DET_L	BB_TO_AP_RESET_DET_L -	3C8 23D6
	@single_brd_lib.SINGLE_BRD	
	RESET_DET_L -	44C1 44D8 48B2
	@single_brd_lib.RADIO_MLB	
RESET_PMU_L	PMU_TO_BB_RST_L -	13B3 23D6
	@single_brd_lib.SINGLE_BRD	
	RESET_PMU_L -	44D3 44D8 46C8
	@single_brd_lib.RADIO_MLB	
RF_RESET_L	RESET_1V8_L -	2B7 4D8 13B6 14C6 16C2
	@single_brd_lib.SINGLE_BRD	19B2 22B4 23D6
	RF_RESET_L -	44C3 44D8
	@single_brd_lib.RADIO_MLB	
RREFEXT	RREFEXT - @single_brd_lib.RADIO_MLB	47A5
S1_GND	S1_GND - @single_brd_lib.RADIO_MLB	45B6 45D2 46B6
S2_GND	S2_GND - @single_brd_lib.RADIO_MLB	45B6 45C2 46B6
S3_GND	S3_GND - @single_brd_lib.RADIO_MLB	45B6 45C2 46B6
S4_GND	S4_GND - @single_brd_lib.RADIO_MLB	45B6 45C2 46B6
S5_GND	S5_GND - @single_brd_lib.RADIO_MLB	45B2 45B5 46B6
SDIO_DATA_1	SDIO_DATA_1 -	65A7 65B6
	@single_brd_lib.RADIO_MLB	
SDIO_DATA_2	SDIO_DATA_2 -	65A7 65B6
	@single_brd_lib.RADIO_MLB	
SIMCRD_CLK_CONN	SIMCRD_CLK_CONN -	44A2 44A6 44C1 48C4
	@single_brd_lib.RADIO_MLB	
SIMCRD_IO_CONN	SIMCRD_IO_CONN -	44A4 44A4 44C1 48C4
	@single_brd_lib.RADIO_MLB	
SIMCRD_RST_CONN	SIMCRD_RST_CONN -	44A4 44A6 44C1 48C4
	@single_brd_lib.RADIO_MLB	
SIM_TRAY_DETECT	SIM_TRAY_DETECT -	44A2 44A5 44C1 48C4
	@single_brd_lib.RADIO_MLB	
SLEEP_CLK_32K	SLEEP_CLK_32K -	44D6 46B2 47B5
	@single_brd_lib.RADIO_MLB	
SPI_CLK	SPI_CLK - @single_brd_lib.RADIO_MLB	48A8 48C4
SPI_CS_L	SPI_CS_L -	48A6 48C4
	@single_brd_lib.RADIO_MLB	
SPI_DATA_MISO	SPI_DATA_MISO -	48A6 48C4
	@single_brd_lib.RADIO_MLB	
SPI_DATA_MOSI	SPI_DATA_MOSI -	48A8 48C4
	@single_brd_lib.RADIO_MLB	
TX_BB_I_N	TX_BB_I_N -	48C6 49D4
	@single_brd_lib.RADIO_MLB	
TX_BB_I_P	TX_BB_I_P -	48C6 49D4
	@single_brd_lib.RADIO_MLB	
TX_BB_Q_N	TX_BB_Q_N -	48C6 49D4
	@single_brd_lib.RADIO_MLB	
TX_BB_Q_P	TX_BB_Q_P -	48C6 49D4
	@single_brd_lib.RADIO_MLB	
TX_GTR_THRESH	BB_TO_LEDDRV_GSM_BLANK -	15A6 23D6
	@single_brd_lib.SINGLE_BRD	
	TX_GTR_THRESH -	44D8 48C2
	@single_brd_lib.RADIO_MLB	
TX_GTR_THRESH_OD	BB_TO_AP_SOCHOT0 -	3B1 23A6
	@single_brd_lib.SINGLE_BRD	
	TX_GTR_THRESH_OD -	44A8 48B2
	@single_brd_lib.RADIO_MLB	
VDDPX_BIAS	VDDPX_BIAS -	46D3 47B6
	@single_brd_lib.RADIO_MLB	
VREF_DAC_BIAS	VREF_DAC_BIAS -	46C3 48C6
	@single_brd_lib.RADIO_MLB	
WLAN_BUCK_OUT	WLAN_BUCK_OUT -	65C7
	@single_brd_lib.RADIO_MLB	
WLAN_CLK32K	WLAN_CLK32K -	65C6
	@single_brd_lib.RADIO_MLB	
WLAN_COEX_RXD	WLAN_COEX_RXD -	65A5 65B6
	@single_brd_lib.RADIO_MLB	
WLAN_COEX_TXD	WLAN_COEX_TXD -	44C6 65A5 65B6
	@single_brd_lib.RADIO_MLB	
WLAN_HSIC3_DEVICE_RD	WLAN_TO_AP_HSIC2_RDY -	3C2 23B6
Y	@single_brd_lib.SINGLE_BRD	
	WLAN_HSIC3_DEVICE_RDY -	44C6 44C8 65B3
	@single_brd_lib.RADIO_MLB	
WLAN_HSIC3_RESUME	WLAN_TO_AP_HSIC2_REMOTE_WAKE -	3C2 23B6
	@single_brd_lib.SINGLE_BRD	
	WLAN_HSIC3_RESUME -	44C6 44D8 65B3
	@single_brd_lib.RADIO_MLB	
WLAN_REG_ON	PMU_TO_WLAN_REG_ON -	13B3 23C6
	@single_brd_lib.SINGLE_BRD	
	WLAN_REG_ON -	44C1 44C8 65C6
	@single_brd_lib.RADIO_MLB	
WLAN_SR_VLX1	WLAN_SR_VLX1 -	65B6
	@single_brd_lib.RADIO_MLB	
WLAN_TX_BLANK	WLAN_TX_BLANK -	48B2 65B3
	@single_brd_lib.RADIO_MLB	
WLAN_UART_RXD	AP_TO_WLAN_UART3_TXD -	3C5 23C6
	@single_brd_lib.SINGLE_BRD	
	WLAN_UART_RXD -	44C8 65B3
	@single_brd_lib.RADIO_MLB	
WLAN_UART_TXD	WLAN_TO_AP_UART3_RXD -	3C5 23C6
	@single_brd_lib.SINGLE_BRD	
	WLAN_UART_TXD -	44C8 65B3
	@single_brd_lib.RADIO_MLB	
WTR_BB_TX_DAC_IREF	WTR_BB_TX_DAC_IREF -	48C6 49D4
	@single_brd_lib.RADIO_MLB	
WTR_GP_DATA0	WTR_GP_DATA0 -	48B2 49D4
	@single_brd_lib.RADIO_MLB	
WTR_GP_DATA1	WTR_GP_DATA1 -	48B2 49D4
	@single_brd_lib.RADIO_MLB	
WTR_GP_DATA2	WTR_GP_DATA2 -	48B2 49C4
	@single_brd_lib.RADIO_MLB	
WTR_RBIAS	WTR_RBIAS -	49C4
	@single_brd_lib.RADIO_MLB	
WTR_RF_ON	WTR_RF_ON -	44C6 48B4 49C4

	@single_brd_lib.RADIO_MLB	
WTR_RX_ON	WTR_RX_ON -	44C6 48B4 49C4
	@single_brd_lib.RADIO_MLB	
WTR_SSBI_PRX_DRX	WTR_SSBI_PRX_DRX -	44C6 48B2 49C4
	@single_brd_lib.RADIO_MLB	
WTR_SSBI_TX_GPS	WTR_SSBI_TX_GPS -	44C6 48B2 49C4
	@single_brd_lib.RADIO_MLB	
XO_GND	XO_GND - @single_brd_lib.RADIO_MLB	46A4
XO_THERM_Y1	XO_THERM_Y1 -	46B4
	@single_brd_lib.RADIO_MLB	

Title: Cref Part Report
Design: single_brd
Date: Sep 7 13:12:06 2012

BS1	PCB_STANDOFF	single_brd[22A5]
BS2	PCB_STANDOFF	single_brd[22A5]
C1	CAP_01005	single_brd[2B7]
C1_RF	SUPPR_TRANSIENT_2P1_01005	radio_mlb[44A4]single_brd[23]
C2	CAP_0201	single_brd[2C6]
C2_RF	CAP_0201-1	radio_mlb[45B4]single_brd[23]
C3	CAP_0204	single_brd[6D3]
C3_RF	CAP_0201-1	radio_mlb[45B4]single_brd[23]
C4	CAP_01005	single_brd[17C7]
C4_RF	CAP_0201-1	radio_mlb[45B4]single_brd[23]
C5	CAP_01005	single_brd[17C6]
C5_RF	CAP_0201-1	radio_mlb[45A3]single_brd[23]
C6	CAP_01005	single_brd[7C6]
C6_RF	CAP_0201-1	radio_mlb[45B3]single_brd[23]
C7	CAP_01005	single_brd[7C6]
C7_RF	CAP_0201-1	radio_mlb[45A3]single_brd[23]
C8	CAP_01005	single_brd[17C6]
C8_RF	CAP_0402-1	radio_mlb[45B3]single_brd[23]
C9	CAP_01005	single_brd[22D6]
C9_RF	CAP_0402-1	radio_mlb[45A3]single_brd[23]
C10	CAP_01005	single_brd[12A5]
C10_RF	CAP_0402-1	radio_mlb[45B3]single_brd[23]
C11	CAP_0201	single_brd[20C3]
C11_RF	CAP_0402-1	radio_mlb[45A2]single_brd[23]
C12	CAP_01005	single_brd[17A6]
C12_RF	CAP_0201-1	radio_mlb[45D2]single_brd[23]
C13	CAP_01005	single_brd[17A6]
C13_RF	CAP_0402-1	radio_mlb[45B2]single_brd[23]
C14	CAP_01005	single_brd[17B2]
C14_RF	CAP_0201-1	radio_mlb[47D8]single_brd[23]
C15_RF	CAP_0201-1	radio_mlb[47D8]single_brd[23]
C16_RF	CAP_0201-1	radio_mlb[47D8]single_brd[23]
C17	CAP_01005	single_brd[19B4]
C17_RF	CAP_0201-1	radio_mlb[47D8]single_brd[23]
C18	CAP_01005	single_brd[19A4]
C18_RF	CAP_0201-1	radio_mlb[47D7]single_brd[23]
C19	CAP_01005	single_brd[19A4]
C19_RF	CAP_0201-1	radio_mlb[47D7]single_brd[23]
C20	CAP_01005	single_brd[2C5]
C20_RF	CAP_0201-1	radio_mlb[47D7]single_brd[23]
C21	CAP_01005	single_brd[2C5]
C21_RF	CAP_0201-1	radio_mlb[47D7]single_brd[23]
C22	CAP_01005	single_brd[22D6]
C22_RF	CAP_0201-1	radio_mlb[47D7]single_brd[23]
C23	CAP_01005	single_brd[22D8]
C23_RF	CAP_0201-1	radio_mlb[47D7]single_brd[23]
C24_RF	CAP_0201-1	radio_mlb[47D7]single_brd[23]
C25	CAP_01005	single_brd[22D7]
C25_RF	CAP_0201-1	radio_mlb[47D7]single_brd[23]
C26	CAP_01005	single_brd[10B7]
C26_RF	CAP_0201-1	radio_mlb[47D7]single_brd[23]
C27	CAP_01005	single_brd[10A7]
C27_RF	CAP_0201-1	radio_mlb[47D6]single_brd[23]
C28_RF	CAP_0201-1	radio_mlb[47D6]single_brd[23]
C29	CAP_0201-1	single_brd[15C4]
C29_RF	CAP_0201-1	radio_mlb[47D6]single_brd[23]
C30	CAP_0610	single_brd[5B5]
C30_RF	CAP_0201-1	radio_mlb[47D6]single_brd[23]
C31	CAP_0201-1	single_brd[16B5]
C31_RF	CAP_01005	radio_mlb[47B6]single_brd[23]
C32_RF	CAP_0201-1	radio_mlb[47D6]single_brd[23]
C33	CAP_01005	single_brd[2C6]
C33_RF	CAP_0201-1	radio_mlb[47A6]single_brd[23]
C34_RF	CAP_0201-1	radio_mlb[47D6]single_brd[23]
C35	CAP_01005	single_brd[2C4]
C35_RF	CAP_0201-1	radio_mlb[47D5]single_brd[23]
C36	CAP_01005	single_brd[2C2]
C36_RF	CAP_0201-1	radio_mlb[47D5]single_brd[23]
C37	CAP_01005	single_brd[2C2]
C37_RF	CAP_01005	radio_mlb[65C4]single_brd[23]
C38	CAP_0201-1	single_brd[16D5]
C38_RF	CAP_01005	radio_mlb[62C6]single_brd[23]
C39	CAP_01005	single_brd[16D4]
C39_RF	CAP_01005	radio_mlb[59B5]single_brd[23]
C40	CAP_0204	single_brd[4B7]
C40_RF	CAP_01005	radio_mlb[59C5]single_brd[23]
C41	CAP_01005	single_brd[4D8]
C41_RF	CAP_402	radio_mlb[58B3]single_brd[23]
C42_RF	CAP_0402-1	radio_mlb[45C8]single_brd[23]
C43	CAP_0204	single_brd[4B8]
C43_RF	CAP_0402-1	radio_mlb[45C7]single_brd[23]
C44	CAP_01005	single_brd[11A4]
C44_RF	CAP_0402-1	radio_mlb[45C7]single_brd[23]
C45	CAP_01005	single_brd[8C3]
C45_RF	CAP_01005	radio_mlb[45C7]single_brd[23]
C46_RF	CAP_0402	radio_mlb[45B6]single_brd[23]
C47	CAP_402	single_brd[14D5]
C47_RF	CAP_0402	radio_mlb[45B6]single_brd[23]
C48	CAP_0204	single_brd[4A8]
C48_RF	CAP_0402	radio_mlb[45B6]single_brd[23]
C49	CAP_0204	single_brd[4C7]
C49_RF	CAP_0402	radio_mlb[45B6]single_brd[23]
C50	CAP_0201	single_brd[6C4]
C50_RF	CAP_01005	radio_mlb[45C5]single_brd[23]
C51	CAP_01005	single_brd[9B2]
C51_RF	CAP_0402	radio_mlb[45B5]single_brd[23]
C52	CAP_0402-1	single_brd[14C4]
C52_RF	CAP_0201-1	radio_mlb[45A4]single_brd[23]
C53	CAP_0204	single_brd[4C8]
C53_RF	CAP_0201-1	radio_mlb[45A4]single_brd[23]
C54	CAP_0402-1	single_brd[14D4]
C54_RF	CAP_0201-1	radio_mlb[45A4]single_brd[23]
C55	CAP_01005	single_brd[9B7]
C55_RF	CAP_603	radio_mlb[45D2]single_brd[23]
C56	CAP_01005	single_brd[11B7]
C56_RF	CAP_603	radio_mlb[45C2]single_brd[23]
C57	CAP_0610	single_brd[4B8]
C57_RF	CAP_0603-3	radio_mlb[45C2]single_brd[23]
C58	CAP_0402	single_brd[12C3]
C58_RF	CAP_0603-3	radio_mlb[45C2]single_brd[23]
C59	CAP_0204	single_brd[4C7]
C59_RF	CAP_603	radio_mlb[45B2]single_brd[23]
C60	CAP_0204	single_brd[4A7]
C60_RF	CAP_01005	radio_mlb[45C2]single_brd[23]
C61	CAP_01005	single_brd[9B7]
C61_RF	CAP_01005	radio_mlb[48B7]single_brd[23]
C62	CAP_01005	single_brd[11C6]
C62_RF	CAP_01005	radio_mlb[48C6]single_brd[23]
C63	CAP_01005	single_brd[11C6]
C63_RF	CAP_01005	radio_mlb[59B5]single_brd[23]
C64	CAP_01005	single_brd[9B6]
C64_RF	CAP_01005	radio_mlb[59B4]single_brd[23]
C65	CAP_01005	single_brd[9B6]
C65_RF	CAP_01005	radio_mlb[59B4]single_brd[23]
C66	CAP_0402	single_brd[12C1]
C66_RF	CAP_01005	radio_mlb[59B4]single_brd[23]
C67	CAP_01005	single_brd[11C3]
C67_RF	CAP_01005	radio_mlb[51B4]single_brd[23]
C68	CAP_0610	single_brd[4C3]
C68_RF	CAP_0201-1	radio_mlb[47C8]single_brd[23]
C69	CAP_0402-1	single_brd[14C4]
C69_RF	CAP_0201-1	radio_mlb[47A6]single_brd[23]
C70	CAP_01005	single_brd[17B4]
C70_RF	CAP_0201-1	radio_mlb[47A6]single_brd[23]
C71	CAP_01005	single_brd[17B4]
C71_RF	CAP_0201-1	radio_mlb[47B6]single_brd[23]
C72	CAP_4P1_0402	single_brd[4C3]
C72_RF	CAP_0402-1	radio_mlb[50D7]single_brd[23]
C73	CAP_01005	single_brd[15A4]
C73_RF	CAP_01005	radio_mlb[50D6]single_brd[23]
C74	CAP_4P1_0402	single_brd[20D5]
C74_RF	CAP_01005	radio_mlb[50D5]single_brd[23]
C75	CAP_0402-1	single_brd[4D3]
C75_RF	CAP_01005	radio_mlb[50C6]single_brd[23]
C76_RF	CAP_01005	radio_mlb[50C6]single_brd[23]
C77_RF	CAP_01005	radio_mlb[50C6]single_brd[23]
C78	CAP_0204	single_brd[5B5]
C78_RF	CAP_01005	radio_mlb[50C6]single_brd[23]
C79	CAP_01005	single_brd[18C8]
C79_RF	CAP_01005	radio_mlb[50B6]single_brd[23]
C80	CAP_0402-1	single_brd[4D3]
C80_RF	CAP_01005	radio_mlb[50B6]single_brd[23]
C81	CAP_0204	single_brd[5C3]
C81_RF	CAP_01005	radio_mlb[50B6]single_brd[23]
C82	CAP_01005	single_brd[21A6]
C82_RF	CAP_01005	radio_mlb[50A6]single_brd[23]
C83	CAP_4P1_0402	single_brd[4C3]
C83_RF	CAP_01005	radio_mlb[50A6]single_brd[23]
C84	CAP_01005	single_brd[21A5]
C84_RF	CAP_01005	radio_mlb[57B6]single_brd[23]
C85	CAP_01005	single_brd[5A2]
C85_RF	CAP_01005	radio_mlb[50D5]single_brd[23]
C86	CAP_0204	single_brd[5B5]
C86_RF	CAP_01005	radio_mlb[50D5]single_brd[23]
C87	CAP_4P1_0402	single_brd[4C3]
C87_RF	CAP_0201-1	radio_mlb[50C5]single_brd[23]
C88	CAP_01005	single_brd[19C3]
C88_RF	CAP_0402-1	radio_mlb[50D3]single_brd[23]
C89	CAP_4P1_0402	single_brd[4C3]
C89_RF	CAP_01005	radio_mlb[50C1]single_brd[23]
C90	CAP_01005	single_brd[19C3]
C90_RF	CAP_01005	radio_mlb[50C1]single_brd[23]
C91	CAP_0204	single_brd[5B3]
C91_RF	CAP_01005	radio_mlb[50C1]single_brd[23]
C92	CAP_4P1_0402	single_brd[20D6]
C92_RF	CAP_01005	radio_mlb[50B1]single_brd[23]
C93	CAP_01005	single_brd[19C3]
C93_RF	CAP_01005	radio_mlb[51A5]single_brd[23]
C94	CAP_01005	single_brd[19D3]
C94_RF	CAP_201	radio_mlb[62A5]single_brd[23]
C95	CAP_0204	single_brd[5B5]
C95_RF	CAP_201	radio_mlb[62A5]single_brd[23]
C96	CAP_01005	single_brd[12B7]
C96_RF	CAP_01005	radio_mlb[62C6]single_brd[23]
C97	CAP_4P1_0402	single_brd[4B3]
C97_RF	CAP_01005	radio_mlb[62C6]single_brd[23]
C98	CAP_01005	single_brd[17D2]
C98_RF	CAP_01005	radio_mlb[62C6]single_brd[23]
C99	CAP_01005	single_brd[17A5]
C99_RF	CAP_01005	radio_mlb[62D4]single_brd[23]
C100	CAP_4P1_0402	single_brd[4B3]
C101	CAP_01005	single_brd[17D3]
C101_RF	CAP_201	radio_mlb[62B7]single_brd[23]
C102	CAP_01005	single_brd[17A5]
C102_RF	CAP_402	radio_mlb[65B7]single_brd[23]
C103	CAP_01005	single_brd[17D3]
C103_RF	CAP_0402-1	radio_mlb[65D5]single_brd[23]
C104	CAP_0201-1	single_brd[12A5]
C104_RF	CAP_01005	radio_mlb[65D5]single_brd[23]
C105	CAP_01005	single_brd[17D3]
C105_RF	CAP_01005	radio_mlb[65C4]single_brd[23]
C106	CAP_01005	single_brd[4A8]
C106_RF	CAP_0201	radio_mlb[65C2]single_brd[23]
C107	CAP_0610	single_brd[4D3]
C107_RF	CAP_0201	radio_mlb[65C2]single_brd[23]
C108	CAP_01005	single_brd[4A8]
C108_RF	CAP_01005	radio_mlb[53D3]single_brd[23]
C109	CAP_0201-1	single_brd[12A4]
C109_RF	CAP_01005	radio_mlb[52B5]single_brd[23]
C110	CAP_01005	single_brd[17D6]
C110_RF	RES_201	radio_mlb[59B3]single_brd[23]
C111	CAP_01005	single_brd[4A7]
C111_RF	CAP_201	radio_mlb[51B2]single_brd[23]
C112	CAP_4P1_0402	single_brd[4B3]
C112_RF	CAP_01005	radio_mlb[53D3]single_brd[23]
C113	CAP_01005	single_brd[4A7]
C113_RF	CAP_01005	radio_mlb[53D4]single_brd[23]
C114	CAP_01005	single_brd[4A5]
C114_RF	CAP_201	radio_mlb[51B5]single_brd[23]
C115	CAP_0204	single_brd[5C2]
C115_RF	CAP_201	radio_mlb[51A5]single_brd[23]
C116	CAP_01005	single_brd[17D6]
C116_RF	CAP_01005	radio_mlb[56C7]single_brd[23]
C117	CAP_01005	single_brd[4A5]
C117_RF	CAP_01005	radio_mlb[56C7]single_brd[23]
C118	CAP_01005	single_brd[4A4]
C118_RF	CAP_01005	radio_mlb[56D5]single_brd[23]
C119	CAP_01005	single_brd[17D3]
C119_RF	CAP_0201-1	radio_mlb[56D5]single_brd[23]
C120	CAP_01005	single_brd[4A4]
C120_RF	IND_0201	radio_mlb[56C3]single_brd[23]
C121	CAP_4P1_0402	single_brd[4B3]
C121_RF	IND_0201	radio_mlb[56C3]single_brd[23]
C122	CAP_4P1_0402	single_brd[4B3]
C122_RF	CAP_01005	radio_mlb[59C5]single_brd[23]
C123	CAP_0402	single_brd[12C4]
C123_RF	CAP_01005	radio_mlb[53D2]single_brd[23]
C124	CAP_4P1_0402	single_brd[4B3]
C124_RF	CAP_01005	radio_mlb[51C4]single_brd[23]
C125_RF	RES_01005	radio_mlb[52D7]single_brd[23]
C126	CAP_01005	single_brd[17D3]
C126_RF	RES_01005	radio_mlb[52C7]single_brd[23]
C127	CAP_0402	single_brd[12C4]
C127_RF	CAP_01005	radio_mlb[46B4]single_brd[23]
C128	CAP_0402	single_brd[12D4]
C128_RF	CAP_01005	radio_mlb[49C5]single_brd[23]
C129_RF	RES_01005	radio_mlb[52C7]single_brd[23]
C130	CAP_01005	single_brd[18C7]
C130_RF	RES_01005	radio_mlb[52C4]single_brd[23]
C131	CAP_0603	single_brd[14B5]
C131_RF	IND_01005	radio_mlb[55C8]single_brd[23]
C132	CAP_0201-1	single_brd[12A3]
C132_RF	CAP_01005	radio_mlb[52B4]single_brd[23]
C133	CAP_0610	single_brd[4C3]
C133_RF	CAP_01005	radio_mlb[53B2]single_brd[23]
C134	CAP_0204	single_brd[5B2]
C134_RF	CAP_01005	radio_mlb[53B2]single_brd[23]
C135	CAP_0402	single_brd[12D3]
C136	CAP_01005	single_brd[6C6]
C136_RF	CAP_01005	radio_mlb[60C6]single_brd[23]
C137	CAP_201	single_brd[18B4]
C137_RF	CAP_01005	radio_mlb[60C6]single_brd[23]
C138	CAP_01005	single_brd[9B2]
C138_RF	CAP_01005	radio_mlb[60C5]single_brd[23]
C139_RF	CAP_01005	radio_mlb[60D3]single_brd[23]
C140	CAP_0402	single_brd[12C2]
C140_RF	RES_201	radio_mlb[59C4]single_brd[23]
C141	CAP_0610	single_brd[4D5]
C141_RF	CAP_01005	radio_mlb[53D7]single_brd[23]
C142	CAP_01005	single_brd[4D1]
C142_RF	CAP_01005	radio_mlb[53D6]single_brd[23]
C143	CAP_01005	single_brd[9B2]
C143_RF	CAP_01005	radio_mlb[53D6]single_brd[23]
C144	CAP_01005	single_brd[6C6]
C144_RF	CAP_01005	radio_mlb[58B6]single_brd[23]
C145	CAP_0402	single_brd[12D3]
C145_RF	CAP_01005	radio_mlb[58B6]single_brd[23]
C146_RF	RES_01005	radio_mlb[54C7]single_brd[23]
C147	CAP_01005	single_brd[18B4]
C147_RF	CAP_01005	radio_mlb[54C6]single_brd[23]
C148_RF	CAP_01005	radio_mlb[54D5]single_brd[23]
C149	CAP_0402-1	single_brd[18D4]
C149_RF	CAP_0201-1	radio_mlb[54D5]single_brd[23]
C150	CAP_01005	single_brd[18B4]
C150_RF	CAP_201	radio_mlb[54C3]single_brd[23]
C151	CAP_0402-1	single_brd[4D3]
C151_RF	CAP_201	radio_mlb[54C3]single_brd[23]
C152	CAP_0610	single_brd[4D3]
C152_RF	CAP_01005	radio_mlb[53D6]single_brd[23]
C153	CAP_0204	single_brd[4D2]
C153_RF	CAP_01005	radio_mlb[53D6]single_brd[23]
C154_RF	CAP_01005	radio_mlb[53D6]single_brd[23]
C155_RF	IND_01005	radio_mlb[60C6]single_brd[23]
C156	CAP_0402-1	single_brd[18D3]
C156_RF	IND_01005	radio_mlb[60B6]single_brd[23]
C157_RF	CAP_01005	radio_mlb[62D2]single_brd[23]
C158	CAP_4P1_0402	single_brd[4D2]
C158_RF	CAP_01005	radio_mlb[62B2]single_brd[23]
C159	CAP_01005	single_brd[13C8]
C160	CAP_0610	single_brd[4D5]
C160_RF	CAP_01005	radio_mlb[52B7]single_brd[23]
C161	CAP_4P1_0402	single_brd[4D1]
C161_RF	CAP_01005	radio_mlb[51C7]single_brd[23]
C162	CAP_0402	single_brd[12D3]
C162_RF	CAP_01005	radio_mlb[51B7]single_brd[23]
C163	CAP_201	single_brd[18D2]
C163_RF	CAP_01005	radio_mlb[51C6]single_brd[23]
C164_RF	CAP_01005	radio_mlb[51C6]single_brd[23]
C165	CAP_01005	single_brd[18D2]
C165_RF	CAP_01005	radio_mlb[51C6]single_brd[23]
C166	CAP_4P1_0402	single_brd[4C5]
C166_RF	CAP_01005	radio_mlb[51B6]single_brd[23]
C167	CAP_01005	single_brd[13B8]
C167_RF	CAP_01005-1	radio_mlb[57C7]single_brd[23]
C168	CAP_01005	single_brd[13A8]
C168_RF	CAP_01005	radio_mlb[58B3]single_brd[23]
C169	CAP_4P1_0402	single_brd[4C5]
C169_RF	CAP_01005	radio_mlb[58C4]single_brd[23]
C170	CAP_0201	single_brd[18D2]
C170_RF	CAP_0201	radio_mlb[65C2]single_brd[23]
C171_RF	CAP_01005	radio_mlb[57B7]single_brd[23]
C172_RF	CAP_01005	radio_mlb[57C6]single_brd[23]
C173	CAP_0204	single_brd[4D2]
C173_RF	CAP_01005	radio_mlb[52B6]single_brd[23]
C174	CAP_4P1_0402	single_brd[4C5]
C174_RF	RES_01005	radio_mlb[52B4]single_brd[23]
C175	CAP_0402	single_brd[12C4]
C175_RF	CAP_01005	radio_mlb[53D3]single_brd[23]
C176	CAP_01005	single_brd[17B7]
C176_RF	CAP_01005	radio_mlb[53D3]single_brd[23]
C177	CAP_0610	single_brd[4D5]
C179	CAP_0201-1	single_brd[12A4]
C180	CAP_0204	single_brd[6D4]
C181	CAP_0402	single_brd[12D3]
C182	CAP_0402-1	single_brd[6D3]
C182_RF	CAP_01005	radio_mlb[49C4]single_brd[23]
C183_RF	CAP_01005	radio_mlb[57B5]single_brd[23]
C184	CAP_01005	single_brd[17D6]
C184_RF	CAP_01005	radio_mlb[57C5]single_brd[23]
C185	CAP_0204	single_brd[6D3]
C185_RF	CAP_402	radio_mlb[57C5]single_brd[23]
C186_RF	CAP_01005	radio_mlb[57B5]single_brd[23]
C187	CAP_0402-1	single_brd[6D2]
C187_RF	CAP_0201-1	radio_mlb[57C4]single_brd[23]
C188	CAP_01005	single_brd[17B3]
C188_RF	CAP_01005	radio_mlb[57C4]single_brd[23]
C189	CAP_0402	single_brd[12C3]
C189_RF	CAP_01005	radio_mlb[58C5]single_brd[23]
C190	CAP_0204	single_brd[7D7]
C191	CAP_01005	single_brd[7C5]
C192	CAP_01005	single_brd[11D6]
C193	CAP_603	single_brd[11C2]
C194	CAP_0201-1	single_brd[11C6]
C196	CAP_01005	single_brd[11C6]
C197	CAP_01005	single_brd[8B6]
C197_RF	CAP_01005	radio_mlb[60B5]single_brd[23]
C198	CAP_01005	single_brd[11D6]
C198_RF	CAP_01005	radio_mlb[60D4]single_brd[23]
C199	CAP_01005	single_brd[11B6]
C200	CAP_01005	single_brd[11A4]
C201	CAP_01005	single_brd[11C7]
C202	CAP_01005	single_brd[11D6]
C204	CAP_0402-1	single_brd[12D7]
C205	CAP_0201-1	single_brd[12A3]
C206	CAP_01005	single_brd[17B2]
C207	CAP_0201-1	single_brd[12A4]
C208	CAP_01005	single_brd[8B4]
C209	CAP_0402-1	single_brd[6D2]
C210	CAP_01005	single_brd[11B6]
C210_RF	CAP_01005	radio_mlb[60C6]single_brd[23]
C211	CAP_01005	single_brd[11B7]
C211_RF	CAP_01005	radio_mlb[52B6]single_brd[23]
C212	CAP_01005	single_brd[11B6]
C212_RF	CAP_01005	radio_mlb[52B6]single_brd[23]
C213	CAP_01005	single_brd[14B5]
C213_RF	CAP_01005	radio_mlb[52D7]single_brd[23]
C214	CAP_01005	single_brd[14A5]
C214_RF	IND_01005	radio_mlb[52D7]single_brd[23]
C215	CAP_0201-1	single_brd[17B7]
C215_RF	IND_01005	radio_mlb[52C7]single_brd[23]
C216	CAP_0201-1	single_brd[8C3]
C216_RF	IND_01005	radio_mlb[55C8]single_brd[23]
C217_RF	IND_01005	radio_mlb[52C7]single_brd[23]
C218	CAP_402	single_brd[10B7]
C218_RF	CAP_01005	radio_mlb[55C8]single_brd[23]
C219	CAP_402	single_brd[10A7]
C219_RF	CAP_01005	radio_mlb[55B8]single_brd[23]
C220	CAP_01005	single_brd[9C7]
C220_RF	IND_01005	radio_mlb[52D7]single_brd[23]
C221	CAP_01005	single_brd[9C7]
C221_RF	CAP_0201	radio_mlb[61B6]single_brd[23]
C222	CAP_01005	single_brd[9C7]
C223	CAP_01005	single_brd[9C7]
C224	CAP_01005	single_brd[9B7]
C225	CAP_01005	single_brd[9B7]
C226	CAP_01005	single_brd[9C6]
C226_RF	RES_01005	radio_mlb[52D4]single_brd[23]
C227	CAP_01005	single_brd[9C6]
C227_RF	CAP_01005	radio_mlb[55C6]single_brd[23]
C228	CAP_01005	single_brd[9B6]
C228_RF	CAP_01005	radio_mlb[55B5]single_brd[23]
C229	CAP_01005	single_brd[9C6]
C229_RF	CAP_01005	radio_mlb[55C4]single_brd[23]
C230	CAP_01005	single_brd[9C6]
C230_RF	CAP_0201-1	radio_mlb[55C4]single_brd[23]
C231	CAP_01005	single_brd[9B6]
C232	CAP_402	single_brd[10C5]
C233	CAP_402	single_brd[10C5]
C233_RF	CAP_0201	radio_mlb[55C2]single_brd[23]
C234	CAP_402	single_brd[10B5]
C234_RF	IND_0201	radio_mlb[55B2]single_brd[23]
C235	CAP_01005	single_brd[9C3]
C236	CAP_01005	single_brd[9C3]
C237	CAP_0201-1	single_brd[10B8]
C237_RF	CAP_01005	radio_mlb[53B7]single_brd[23]
C238	CAP_402	single_brd[10B8]
C238_RF	CAP_01005	radio_mlb[53C7]single_brd[23]
C239_RF	CAP_01005	radio_mlb[53C7]single_brd[23]
C240	CAP_01005	single_brd[17B4]
C240_RF	CAP_01005	radio_mlb[53C7]single_brd[23]
C241	CAP_01005	single_brd[8B4]
C241_RF	CAP_01005	radio_mlb[53D6]single_brd[23]
C242	CAP_01005	single_brd[17D6]
C242_RF	CAP_0201-1	radio_mlb[53D6]single_brd[23]
C243	CAP_01005	single_brd[19B4]
C244	CAP_01005	single_brd[8C3]
C244_RF	CAP_01005	radio_mlb[50D1]single_brd[23]
C245_RF	CAP_201	radio_mlb[53B5]single_brd[23]
C246_RF	CAP_01005	radio_mlb[53B5]single_brd[23]
C247_RF	CAP_01005	radio_mlb[62D5]single_brd[23]
C248_RF	RES_201	radio_mlb[53C4]single_brd[23]
C249	CAP_0201-1	single_brd[21B6]
C249_RF	RES_201	radio_mlb[53C4]single_brd[23]
C250	CAP_0402-1	single_brd[12A7]
C250_RF	CAP_201	radio_mlb[53D4]single_brd[23]
C251	CAP_0402-1	single_brd[12A7]
C251_RF	CAP_01005	radio_mlb[49C2]single_brd[23]
C252	CAP_0402-1	single_brd[14B8]
C252_RF	CAP_201	radio_mlb[53C3]single_brd[23]
C253	CAP_01005	single_brd[11B3]
C253_RF	CAP_01005	radio_mlb[53B3]single_brd[23]
C254	CAP_01005	single_brd[16D5]
C255_RF	CAP_01005	radio_mlb[53B2]single_brd[23]
C256	CAP_0402	single_brd[11A3]
C256_RF	CAP_01005	radio_mlb[53B2]single_brd[23]
C258	CAP_01005	single_brd[19B3]
C258_RF	RES_201	radio_mlb[53C2]single_brd[23]
C259	CAP_01005	single_brd[7C5]
C260	CAP_0402-1	single_brd[12B8]
C261	CAP_0402-1	single_brd[12B8]
C261_RF	CAP_201	radio_mlb[53C4]single_brd[23]
C262	CAP_0402	single_brd[12D3]
C263	CAP_0402-1	single_brd[12B8]
C263_RF	CAP_01005	radio_mlb[53C2]single_brd[23]
C264	CAP_0402-1	single_brd[12B8]
C264_RF	CAP_201	radio_mlb[53B6]single_brd[23]
C265	CAP_01005	single_brd[13B6]
C266	CAP_0201-1	single_brd[12C8]
C267	CAP_0402-1	single_brd[12B8]
C268	CAP_0402-1	single_brd[12B8]
C268_RF	CAP_01005	radio_mlb[59C3]single_brd[23]
C269_RF	CAP_01005	radio_mlb[59C2]single_brd[23]
C270	CAP_0402-1	single_brd[12B7]
C271	CAP_0402-1	single_brd[12B7]
C271_RF	CAP_01005	radio_mlb[62D2]single_brd[23]
C272	CAP_402	single_brd[12C7]
C272_RF	CAP_01005	radio_mlb[53D3]single_brd[23]
C273_RF	CAP_01005	radio_mlb[53B3]single_brd[23]
C274	CAP_01005	single_brd[7C4]
C274_RF	CAP_01005	radio_mlb[50C6]single_brd[23]
C275	CAP_01005	single_brd[22D6]
C276	CAP_01005	single_brd[12A7]
C278	CAP_402	single_brd[12B7]
C279	CAP_01005	single_brd[22D6]
C280	CAP_01005	single_brd[7B5]
C280_RF	CAP_0201	radio_mlb[65C2]single_brd[23]
C281	CAP_0402-1	single_brd[12D7]
C281_RF	CAP_0201	radio_mlb[65C2]single_brd[23]
C282	CAP_4P1_0402	single_brd[4C5]
C283	CAP_01005	single_brd[12A7]
C284	CAP_01005	single_brd[7B4]
C285	CAP_0610	single_brd[4C8]
C286	CAP_01005	single_brd[21B5]
C287	CAP_01005	single_brd[21B5]
C289	CAP_0201-1	single_brd[8C6]
C290	CAP_0402	single_brd[12D4]
C291	CAP_01005	single_brd[12A3]
C292	CAP_0402	single_brd[12D4]
C293	CAP_0402	single_brd[12D2]
C294	CAP_0402	single_brd[12D3]

C295	CAP_01005	single_brd[19B3]
C296	CAP_0402	single_brd[12D4]
C297	CAP_0402-1	single_brd[14B8]
C298	CAP_0201-1	single_brd[20A6]
C299	CAP_402	single_brd[12A4]
C300	CAP_01005	single_brd[20A6]
C301	CAP_0402	single_brd[12C4]
C302	CAP_0610	single_brd[4B7]
C303	CAP_0402	single_brd[12C4]
C304	CAP_0402	single_brd[16D2]
C305	CAP_0610	single_brd[5C2]
C306	CAP_0201	single_brd[18D5]
C307	CAP_0402-1	single_brd[6D2]
C308	CAP_0402	single_brd[12D2]
C309	CAP_01005	single_brd[15C4]
C310	CAP_0402	single_brd[12C3]
C311	CAP_01005	single_brd[8B6]
C313	CAP_01005	single_brd[8B6]
C314	CAP_01005	single_brd[8B6]
C315	CAP_0402	single_brd[18D4]
C316	CAP_0402	single_brd[12D1]
C317	CAP_201	single_brd[13C4]
C318	CAP_0201-1	single_brd[13C4]
C319	CAP_201	single_brd[13C4]
C320	CAP_P_0603-LLP	single_brd[18A4]
C321	CAP_P_0402	single_brd[18B4]
C322	CAP_01005	single_brd[13B8]
C323	CAP_01005	single_brd[13C3]
C324	CAP_0402	single_brd[18D4]
C325	CAP_0402-1	single_brd[12A8]
C326	CAP_01005	single_brd[13C3]
C327	CAP_0402	single_brd[12C1]
C328	CAP_0201	single_brd[18B3]
C329	CAP_0603	single_brd[14C3]
C330	CAP_0402-1	single_brd[14C3]
C331	CAP_0402	single_brd[18D4]
C332	CAP_0402-1	single_brd[15C6]
C333	CAP_0402-1	single_brd[15C7]
C334	CAP_0201-1	single_brd[20B3]
C335	CAP_0402-1	single_brd[15D6]
C336	CAP_01005	single_brd[20B3]
C337	CAP_0201-1	single_brd[15D6]
C338	CAP_0201-1	single_brd[16C3]
C339	CAP_201	single_brd[15D5]
C340	CAP_402	single_brd[15C4]
C341	CAP_0201-1	single_brd[15C4]
C342	CAP_0201	single_brd[15D6]
C343	CAP_0201-1	single_brd[12B7]
C344	CAP_01005	single_brd[20D2]
C345	CAP_01005	single_brd[20D3]
C346	CAP_0201	single_brd[18A3]
C347	CAP_0201-1	single_brd[20D2]
C348	CAP_0603	single_brd[15D6]
C349	CAP_0201	single_brd[18B3]
C350	CAP_0402	single_brd[19D2]
C351	CAP_0402	single_brd[19D2]
C354	CAP_01005	single_brd[9A6]
C355	CAP_01005	single_brd[17B6]
C356	CAP_01005	single_brd[9A6]
C357	CAP_0402-1	single_brd[12C8]
C358	CAP_0402-1	single_brd[12C8]
C359	CAP_01005	single_brd[17B6]
C360	CAP_01005	single_brd[15B3]
C362	CAP_01005	single_brd[9A6]
C363	CAP_01005	single_brd[15B3]
C364	CAP_0201	single_brd[18A3]
C365	CAP_0201	single_brd[18D2]
C366	CAP_0201	single_brd[18C4]
C367	CAP_01005	single_brd[15C3]
C368	CAP_0201	single_brd[17A6]
C369	CAP_0402-1	single_brd[18C7]
C370	CAP_402	single_brd[18C7]
C371	CAP_402	single_brd[18C7]
C372	CAP_0201-1	single_brd[18C6]
C374	SUPPR_TRANSIENT_2P1_01005	single_brd[17C3]
C375	SUPPR_TRANSIENT_2P1_01005	single_brd[17C3]
C376	CAP_0201	single_brd[6D3]
C377	CAP_0402	single_brd[6D3]
C378	CAP_0402	single_brd[6D3]
C379	CAP_0201-1	single_brd[5A5]
C380	CAP_0201	single_brd[11C3]
C381	CAP_0201	single_brd[18D5]
C382	CAP_01005	single_brd[8B3]
C383	CAP_01005	single_brd[8B3]
C384	CAP_01005	single_brd[8B3]
C385	CAP_0402-1	single_brd[12B8]
C386	CAP_0402-1	single_brd[15B6]
C387	CAP_0402-1	single_brd[15B6]
C389	CAP_0201-1	single_brd[21C6]
C390	CAP_0201-1	single_brd[21C6]
C391	CAP_0201-1	single_brd[21D6]
C392	CAP_01005	single_brd[21C5]
C393	CAP_01005	single_brd[21D5]
C394	CAP_0402-1	single_brd[15B4]
C395	CAP_01005	single_brd[21C5]
C396	CAP_0402-1	single_brd[15B4]
C397	CAP_01005	single_brd[8D3]
C398	CAP_0402-1	single_brd[12B8]
C399	CAP_0402-1	single_brd[12A8]
C400	CAP_01005	single_brd[21A5]
C401	CAP_0402-1	single_brd[12B8]
C402	CAP_01005	single_brd[11C3]
C403	CAP_0201-1	single_brd[21B5]
C404	CAP_01005	single_brd[21B5]
C405	CAP_0402-1	single_brd[12A8]
C406	CAP_01005	single_brd[8D6]
C407	CAP_01005	single_brd[11C3]
C408	CAP_01005	single_brd[15A4]
C409	CAP_01005	single_brd[8D6]
C410	CAP_01005	single_brd[11C3]
C411	CAP_0402-1	single_brd[12B7]
C412	CAP_0201-1	single_brd[10C7]
C413	CAP_01005	single_brd[10C7]
C414	CAP_0402-1	single_brd[10C7]
C416	CAP_01005	single_brd[10C6]
C417	CAP_0402-1	single_brd[12A7]
C418	CAP_0402-1	single_brd[12A7]
C419	CAP_0201-1	single_brd[12A2]
C420	CAP_201	single_brd[10D6]
C421	CAP_201	single_brd[10D6]
C422	CAP_0402-1	single_brd[10D7]
C423	CAP_0201-1	single_brd[21D6]

C424	CAP_0402-1	single_brd[10B5]
C425	CAP_402	single_brd[10C4]
C427	CAP_01005	single_brd[22A8]
C429	CAP_402	single_brd[10B4]
C430	CAP_01005	single_brd[22A8]
C432	CAP_01005	single_brd[22A7]
C433	CAP_01005	single_brd[22A6]
C434	CAP_01005	single_brd[22A6]
C435	CAP_01005	single_brd[22A6]
C436	CAP_01005	single_brd[22A6]
C437	CAP_01005	single_brd[22A6]
C438	CAP_01005	single_brd[22A6]
C439	CAP_201	single_brd[19D3]
C440	CAP_01005	single_brd[19D4]
C441	CAP_0201	single_brd[14C4]
C442	CAP_0201-1	single_brd[12A3]
C443	CAP_0402	single_brd[12D2]
C444	CAP_01005	single_brd[19D3]
C500	CAP_01005	single_brd[15B2]
C501	CAP_01005	single_brd[15B2]
C1201_RF	CAP_0402	radio_mlb[58C5]single_brd[23]
C1214_RF	CAP_01005	radio_mlb[58C5]single_brd[23]
C1215_RF	CAP_0201-1	radio_mlb[58C4]single_brd[23]
C1400	CAP_0402	single_brd[14B1]
C1401	CAP_01005	single_brd[14B4]
C1402	CAP_01005	single_brd[14B2]
C1403	CAP_0402	single_brd[14B2]
C1726_RF	CAP_01005	radio_mlb[62D7]single_brd[23]
C2307	CAP_01005	single_brd[17B2]
D1	DIODE_SCHOT_2P_SOD-923-HF	single_brd[14B6]
D2	DIODE_SCHOT_SM-201	single_brd[18B4]
D3	DIODE_SCHOT_DFN1006-2	single_brd[8C6]
D1400	DIODE_SCHOT_SM-201	single_brd[14B3]
DZ1	SUPPR_TRANSIENT_2P1_01005-1	single_brd[8B6]
DZ2	SUPPR_TRANSIENT_2P1_01005-1	single_brd[8B6]
DZ3	SUPPR_TRANSIENT_2P1_01005-1	single_brd[8B6]
DZ4	ZENER_GDZ-0201	single_brd[18D3]
DZ7	SUPPR_TRANSIENT_2P1_01005-1	single_brd[8B6]
DZ9	SUPPR_TRANSIENT_2P1_01005	single_brd[17B6]
DZ10	SUPPR_TRANSIENT_2P1_01005	single_brd[17B6]
DZ11	SUPPR_TRANSIENT_2P1_01005	single_brd[17C6]
DZ12	SUPPR_TRANSIENT_2P1_01005	single_brd[17C6]
DZ13	SUPPR_TRANSIENT_2P1_01005	single_brd[17B5]
DZ14	SUPPR_TRANSIENT_2P1_01005	single_brd[17B5]
DZ15	SUPPR_TRANSIENT_2P1_01005-1	single_brd[17B6]
DZ16	SUPPR_TRANSIENT_2P1_01005-1	single_brd[11B5]
DZ17	SUPPR_TRANSIENT_2P1_01005-1	single_brd[11B5]
DZ18	SUPPR_TRANSIENT_2P1_01005-1	single_brd[11B5]
DZ19	SUPPR_TRANSIENT_2P1_01005-1	single_brd[11B5]
DZ101	SUPPR_TRANSIENT_2P1_01005-1	single_brd[8C5]
FD1	FIDUCIAL_0P5SM1P0SQ-NSP	single_brd[22C8]
FD2	FIDUCIAL_0P5SM1P0SQ-NSP	single_brd[22C8]
FD3	FIDUCIAL_0P5SM1P0SQ-NSP	single_brd[22B8]
FD4	FIDUCIAL_0P5SM1P0SQ-NSP	single_brd[22B8]
FD5	FIDUCIAL_0P5SM1P0SQ-NSP	single_brd[22B8]
FD6	FIDUCIAL_0P5SM1P0SQ-NSP	single_brd[22B8]
FL1	FILTER_2P_01005	single_brd[17C7]
FL2	FILTER_2P_01005	single_brd[11B7]
FL2_RF	FIL_SAW_TX_B1B3B34B39_10P_LGA	radio_mlb[52D3]single_brd[23]
FL3	FILTER_2P_01005	single_brd[8B6]
FL3_RF	FILTER_SAW_SATGR832MBM0F57_LGA	radio_mlb[52D6]single_brd[23]
FL4	FILTER_2P_01005	single_brd[11B7]
FL4_RF	FILTER_2P_01005-1	radio_mlb[48B7]single_brd[23]
FL5	FILTER_2P_01005	single_brd[17B7]
FL6	FILTER_2P_0402	single_brd[15C2]
FL7	FILTER_2P_01005	single_brd[8B6]
FL8	FILTER_2P_01005	single_brd[8B6]
FL9	FILTER_2P_0402	single_brd[15C2]
FL9_RF	FILTER_4P10_LFL0Q1G69TM1D511	radio_mlb[62C6]single_brd[23]
FL10	FILTER_2P_01005	single_brd[17C7]
FL11	FILTER_2P_01005	single_brd[22D6]
FL11_RF	FILTER_SAWFD847MGA0F57_LGA	radio_mlb[55C7]single_brd[23]
FL12	FILTER_2P_01005	single_brd[11D7]
FL12_RF	FILTER_3P3_LFL181G95TF	radio_mlb[53C3]single_brd[23]
FL13	FILTER_2P_01005	single_brd[11D7]
FL14	FILTER_2P_01005	single_brd[11C7]
FL15	FILTER_2P_01005	single_brd[11D7]
FL16	FILTER_2P_01005	single_brd[17C6]
FL17	FILTER_2P_01005	single_brd[17C6]
FL19	FILTER_2P_01005-1	single_brd[17D2]
FL20	FILTER_2P_01005	single_brd[11B7]
FL21	FILTER_2P_01005	single_brd[8D3]
FL22	FILTER_2P_01005	single_brd[21A6]
FL23	FILTER_2P_01005-1	single_brd[11C2]
FL24	FILTER_2P_0201-1	single_brd[19B3]
FL25	FILTER_2P_0201-1	single_brd[19A3]
FL26	FILTER_2P_0201-1	single_brd[19A3]
FL27	FILTER_2P_0201-1	single_brd[19D3]
FL28	FILTER_2P_01005	single_brd[21A6]
FL29	FILTER_2P_01005	single_brd[21B6]
FL30	FILTER_2P_01005	single_brd[21B6]
FL31	FILTER_2P_01005	single_brd[21B6]
FL32	FILTER_2P_01005	single_brd[17D2]
FL33	FILTER_2P_01005-1	single_brd[17D6]
FL34	FILTER_2P_01005	single_brd[19C3]

FL35	FILTER_2P_01005	single_brd[19D3]
FL36	FILTER_2P_01005	single_brd[19C3]
FL37	FILTER_2P_0201-1	single_brd[19D3]
FL38	FILTER_2P_01005	single_brd[20B7]
FL39	FILTER_2P_01005	single_brd[20B5]
FL40	FILTER_2P_01005	single_brd[20D7]
FL41	FILTER_2P_01005	single_brd[20D4]
FL42	FILTER_2P_01005	single_brd[20D7]
FL43	FILTER_2P_01005-1	single_brd[21B6]
FL44	FILTER_2P_01005-1	single_brd[11D3]
FL45	FILTER_2P_01005	single_brd[11C7]
FL46	FILTER_2P_01005	single_brd[8B6]
FL47	FILTER_2P_01005	single_brd[8C3]
FL48	FILTER_2P_01005	single_brd[11B2]
FL49	FILTER_2P_01005	single_brd[17B7]
FL50	FILTER_2P_01005	single_brd[17D2]
FL51	FILTER_2P_01005-1	single_brd[11A7]
FL52	FILTER_2P_01005-1	single_brd[11A7]
FL53	FILTER_2P_01005-1	single_brd[17A3]
FL54	FILTER_2P_01005-1	single_brd[17D6]
FL55	FILTER_2P_01005	single_brd[20D4]
FL56	FILTER_2P_01005	single_brd[20D4]
FL57	FILTER_2P_01005	single_brd[11B7]
FL58	FILTER_2P_01005	single_brd[11C7]
FL59	FILTER_2P_01005	single_brd[17D2]
FL60	FILTER_2P_01005-1	single_brd[17A3]
FL61	FILTER_2P_01005-1	single_brd[19D3]
FL62	FILTER_2P_01005	single_brd[19B3]
FL63	FILTER_2P_01005	single_brd[17D2]
FL64	FILTER_2P_01005-1	single_brd[11A7]
FL65	FILTER_2P_01005-1	single_brd[11A7]
FL66	FILTER_2P_01005	single_brd[17D6]
FL67	FILTER_2P_0201	single_brd[5A5]
FL68	FILTER_2P_01005	single_brd[17B7]
FL69	FILTER_2P_01005	single_brd[17C7]
FL70	FILTER_2P_01005	single_brd[8B3]
FL71	FILTER_2P_01005	single_brd[8C3]
FL72	FILTER_2P_01005	single_brd[8B3]
FL74	FILTER_2P_01005-1	single_brd[8C6]
FL1701_RF	FILTER_3P5_LFE18832MHC1D449	radio_mlb[62D7]single_brd[23]
FL2302	FILTER_2P_01005	single_brd[17C2]
J1	CON_F34ST_D6MT_SM_F-ST-SM	single_brd[11C5]
J1_RF	CON_M54ST_D4MT_SM_M-ST-SM	radio_mlb[44D2]single_brd[23]
J2	CON_M18ST_D4MT_SM_M-ST-SM	single_brd[8C4]
J2_RF	CON_F1ST_COAX_S3MT_SM_F-ST-SM	radio_mlb[44B2]single_brd[23]
J3	CON_M32ST_D4MT_SM_M-ST-SM	single_brd[21C4]
J3_RF	CON_F1ST_COAX_S3MT_SM_F-ST-SM	radio_mlb[44B2]single_brd[23]
J4	CON_M42ST_D2MT_SM_M-ST-SM	single_brd[18A7]
J4_RF	CON_F1ST_COAX_S3MT_SM_F-ST-SM	radio_mlb[62A6]single_brd[23]
J5	CON_M22ST_D4MT_SM_M-ST-SM	single_brd[19C5]
J5_RF	CON_F1ST_COAX_S3MT_SM_F-ST-SM	radio_mlb[62C1]single_brd[23]
J6	CON_F6ST_6MT_BATT_SM_F-ST-SM	single_brd[22D7]
J6_RF	CON_F1ST_COAX_S3MT_SM_F-ST-SM	radio_mlb[62C1]single_brd[23]
J7	CON_M38ST_D4MT_SM_M-ST-SM	single_brd[17C4]
J8_RF	CON_F2ST_COAX_1MT_SM_F-RT-SM	radio_mlb[62D4]single_brd[23]
J9_RF	CON_F2ST_COAX_3MT_SM_F-RT-SM	radio_mlb[62A4]single_brd[23]
J10_RF	CON_F1ST_COAX_S3MT_SM_F-ST-SM	radio_mlb[62B8]single_brd[23]
J11_RF	CON_F6ST_6MT_SIMCARD_SM3_F-ST-SM	radio_mlb[44A6]single_brd[23]
J12_RF	CON_F2ST_COAX_1MT_SM_F-RT-SM	radio_mlb[61C5]single_brd[23]
L1_RF	IND_0806	radio_mlb[45D3]single_brd[23]
L2_RF	IND_0806	radio_mlb[45C3]single_brd[23]
L3	IND_P_VLF302510T-SM	single_brd[14B7]
L3_RF	IND_0806	radio_mlb[45C3]single_brd[23]
L4	IND_TFA252010-SM	single_brd[15C6]
L4_RF	IND_0806	radio_mlb[45D3]single_brd[23]
L5	IND_P_TFA201610G-SM	single_brd[15B6]
L5_RF	IND_TFA252010-SM	radio_mlb[45C3]single_brd[23]
L6	IND_0201	single_brd[17C2]
L6_RF	IND_01005	radio_mlb[62D7]single_brd[23]
L7	IND_0201	single_brd[17C2]
L7_RF	IND_0201	radio_mlb[51C3]single_brd[23]
L8	IND_P_TFA201610G-PSE20161T2R2	single_brd[12C7]
L8_RF	IND_03015	radio_mlb[62D4]single_brd[23]
L9	IND_P_TFA201610G-SM	single_brd[12D4]
L9_RF	IND_0603	radio_mlb[65B6]single_brd[23]
L10	IND_P_TFA201610G-SM	single_brd[12D4]
L10_RF	RES_201	radio_mlb[51B4]single_brd[23]
L11	IND_P_TFA201610G-SM	single_brd[12D4]
L11_RF	RES_201	radio_mlb[51A4]single_brd[23]
L12	IND_P_TFA201610G-SM	single_brd[12D4]
L12_RF	RES_01005	radio_mlb[53D1]single_brd[23]
L13	IND_P_TFA201610G-SM	single_brd[12C4]
L13_RF	IND_0201	radio_mlb[59B3]single_brd[23]
L14	IND_P_TFA201610G-SM	single_brd[12C4]
L14_RF	IND_01005	radio_mlb[56C6]single_brd[23]
L15	IND_P_TFA201610G-SM	single_brd[12C4]
L15_RF	IND_01005	radio_mlb[56C6]single_brd[23]
L16	IND_P_TFA201610G-SM	single_brd[12D2]
L16_RF	IND_0201	radio_mlb[56C3]single_brd[23]
L17	IND_P_TFA201610G-SM	single_brd[12D2]
L17_RF	IND_0201	radio_mlb[56C3]single_brd[23]
L18	IND_TFA201210G-SM	single_brd[12C2]
L18_RF	RES_201	radio_mlb[51B2]single_brd[23]
L19	IND_P_TFA201610G-SM	single_brd[14D6]
L19_RF	IND_01005	radio_mlb[52A4]single_brd[23]
L20	FILTER_4P_TCM0605-1	single_brd[17B3]
L20_RF	IND_01005	radio_mlb[53B7]single_brd[23]
L21	IND_PSB12101T-SM	single_brd[18B3]
L21_RF	IND_MAKK2016-SM	radio_mlb[58B4]single_brd[23]
L22	FILTER_4P_TCM0605-1	single_brd[17B3]
L22_RF	IND_01005	radio_mlb[54C7]single_brd[23]
L23_RF	IND_01005	radio_mlb[54C7]single_brd[23]
L24_RF	RES_201	radio_mlb[54C3]single_brd[23]
L25_RF	IND_0201	radio_mlb[51B3]single_brd[23]

L26_RF	FILTER_4P11_LLP	radio_mlb[51C5]single_brd[23]
L27_RF	IND_0201DS	radio_mlb[51C6]single_brd[23]
L28	IND_0201	single_brd[21C6]
L28_RF	CAP_201	radio_mlb[55B2]single_brd[23]
L29	IND_0201	single_brd[21D6]
L29_RF	RES_01005	radio_mlb[53C7]single_brd[23]
L30	IND_0201	single_brd[21C5]
L30_RF	RES_01005	radio_mlb[53C7]single_brd[23]
L31_RF	IND_0201DS	radio_mlb[51C7]single_brd[23]
L32_RF	IND_0201DS	radio_mlb[51B7]single_brd[23]
L33	FILTER_4P_TCM0605-1	single_brd[21C2]
L33_RF	RES_201	radio_mlb[62B7]single_brd[23]
L34	FILTER_4P_TCM0605-1	single_brd[21C2]
L34_RF	IND_0201DS	radio_mlb[51B6]single_brd[23]
L35	FILTER_4P_TCM0605-1	single_brd[11D2]
L35_RF	IND_01005	radio_mlb[57B7]single_brd[23]
L36	FILTER_4P_TCM0605-1	single_brd[21B2]
L36_RF	IND_01005	radio_mlb[57C7]single_brd[23]
L37	FILTER_4P_TCM0605-1	single_brd[21B2]
L37_RF	IND_0201	radio_mlb[57B3]single_brd[23]
L38	FILTER_4P_TCM0605-1	single_brd[21B2]
L38_RF	IND_0201	radio_mlb[57B3]single_brd[23]
L39	FILTER_4P_TCM0605-1	single_brd[11D2]
L39_RF	IND_0201	radio_mlb[57B3]single_brd[23]
L40_RF	IND_01005	radio_mlb[60B5]single_brd[23]
L41	FILTER_4P_TCM0605-1	single_brd[19C7]
L41_RF	IND_0201	radio_mlb[59C4]single_brd[23]
L42	FILTER_4P_TCM0605-1	single_brd[19C7]
L42_RF	IND_01005	radio_mlb[60B5]single_brd[23]
L43_RF	IND_01005	radio_mlb[60C5]single_brd[23]
L44	FILTER_4P_TCM0605-1	single_brd[19C7]
L44_RF	RES_01005	radio_mlb[53C7]single_brd[23]
L45_RF	RES_01005	radio_mlb[53B7]single_brd[23]
L46_RF	RES_01005	radio_mlb[60B4]single_brd[23]
L47_RF	RES_01005	radio_mlb[60A4]single_brd[23]
L48_RF	IND_0201	radio_mlb[62C4]single_brd[23]
L49_RF	IND_0201	radio_mlb[62B5]single_brd[23]
L50_RF	IND_0201	radio_mlb[62C5]single_brd[23]
L51_RF	IND_0201	radio_mlb[62C3]single_brd[23]
L52_RF	CAP_01005	radio_mlb[60A6]single_brd[23]
L53_RF	IND_01005	radio_mlb[55C5]single_brd[23]
L54_RF	IND_01005	radio_mlb[55C5]single_brd[23]
L55_RF	IND_01005	radio_mlb[51B7]single_brd[23]
L56_RF	IND_01005	radio_mlb[60A7]single_brd[23]
L57_RF	IND_0201	radio_mlb[55C2]single_brd[23]
L58_RF	IND_0201	radio_mlb[51D6]single_brd[23]
L59_RF	IND_01005	radio_mlb[52D4]single_brd[23]
L60_RF	IND_01005	radio_mlb[52C4]single_brd[23]
L61_RF	IND_01005	radio_mlb[52C2]single_brd[23]
L62_RF	IND_0201	radio_mlb[61C6]single_brd[23]
L63_RF	IND_01005	radio_mlb[60B4]single_brd[23]
L64_RF	IND_0201	radio_mlb[51D6]single_brd[23]
L65_RF	IND_01005	radio_mlb[60A6]single_brd[23]
L66_RF	IND_01005	radio_mlb[62D7]single_brd[23]
L67_RF	IND_01005	radio_mlb[62C7]single_brd[23]
L68_RF	IND_01005	radio_mlb[62C7]single_brd[23]
L69_RF	IND_01005	radio_mlb[62D4]single_brd[23]
L70_RF	RES_01005	radio_mlb[53B2]single_brd[23]
L71_RF	RES_01005	radio_mlb[53B2]single_brd[23]
L72_RF	IND_0201	radio_mlb[53A2]single_brd[23]
L73_RF	IND_01005	radio_mlb[53C2]single_brd[23]
L74_RF	IND_01005	radio_mlb[51D4]single_brd[23]
L75_RF	IND_01005	radio_mlb[51C4]single_brd[23]
L76_RF	RES_201	radio_mlb[54C3]single_brd[23]
L77_RF	IND_01005	radio_mlb[60A4]single_brd[23]
L78_RF	IND_0201	radio_mlb[51B3]single_brd[23]
L79_RF	IND_0201	radio_mlb[51D7]single_brd[23]
L80_RF	RES_201	radio_mlb[51A2]single_brd[23]
L81_RF	IND_01005	radio_mlb[52C2]single_brd[23]
L82_RF	IND_01005	radio_mlb[54C6]single_brd[23]
L83_RF	RES_01005	radio_mlb[51A4]single_brd[23]
L90_RF	IND_01005	radio_mlb[51D4]single_brd[23]
L91_RF	IND_01005	radio_mlb[51D4]single_brd[23]
L92_RF	IND_01005	radio_mlb[51C4]single_brd[23]
L93_RF	IND_01005	radio_mlb[51C4]single_brd[23]
L94_RF	CAP_0201	radio_mlb[55C2]single_brd[23]
L95_RF	IND_01005	radio_mlb[51B6]single_brd[23]
L96_RF	IND_01005	radio_mlb[51A6]single_brd[23]
L97_RF	CAP_201	radio_mlb[53A2]single_brd[23]
L98_RF	IND_01005	radio_mlb[52C2]single_brd[23]
L99_RF	IND_P_0201	radio_mlb[53A3]single_brd[23]
L100_RF	IND_01005	radio_mlb[53C4]single_brd[23]
L1400	IND_0603	single_brd[14B3]
L1732_RF	IND_03015	radio_mlb[62D6]single_brd[23]
PP1_RF	PROBEPOINT_SM	radio_mlb[44D7]single_brd[23]
PP2	PROBEPOINT_SM	single_brd[6B8]
PP2_RF	PROBEPOINT_SM	radio_mlb[44D7]single_brd[23]
PP3	PROBEPOINT_SM	single_brd[6A8]
PP3_RF	PROBEPOINT_SM	radio_mlb[44D7]single_brd[23]
PP4_RF	PROBEPOINT_SM	radio_mlb[44B7]single_brd[23]
PP5_RF	PROBEPOINT_SM	radio_mlb[44B7]single_brd[23]
PP6_RF	PROBEPOINT_SM	radio_mlb[44B7]single_brd[23]
PP7	PROBEPOINT_SM	single_brd[18B8]
PP7_RF	PROBEPOINT_SM	radio_mlb[44A7]single_brd[23]
PP8	PROBEPOINT_SM	single_brd[18B8]
PP9	PROBEPOINT_SM	single_brd[18B5]
PP10	PROBEPOINT_SM	single_brd[6A8]
PP11	PROBEPOINT_SM	single_brd[18B1]
PP11_RF	PROBEPOINT_SM	radio_mlb[44D7]single_brd[23]
PP12	PROBEPOINT_SM	single_brd[18B7]
PP13	PROBEPOINT_SM	single_brd[3D1]
PP14_RF	PROBEPOINT_SM	radio_mlb[44C7]single_brd[23]
PP15	PROBEPOINT_SM	single_brd[3D1]
PP15_RF	PROBEPOINT_SM	radio_mlb[44C7]single_brd[23]
PP17	PROBEPOINT_SM	single_brd[6B4]
PP18	PROBEPOINT_SM	single_brd[18B1]
PP18_RF	PROBEPOINT_SM	radio_mlb[44C7]single_brd[23]
PP19	PROBEPOINT_SM	single_brd[6B4]
PP19_RF	PROBEPOINT_SM	radio_mlb[44C7]single_brd[23]
PP20_RF	PROBEPOINT_SM	radio_mlb[44C7]single_brd[23]
PP21_RF	PROBEPOINT_SM	radio_mlb[44C7]single_brd[23]
PP22	PROBEPOINT_SM	single_brd[16C2]
PP22_RF	PROBEPOINT_SM	radio_mlb[44C7]single_brd[23]
PP23	PROBEPOINT_SM	single_brd[2C7]
PP24	PROBEPOINT_SM	single_brd[2B7]
PP40_RF	PROBEPOINT_SM	radio_mlb[44C7]single_brd[23]
PP41_RF	PROBEPOINT_SM	radio_mlb[44C7]single_brd[23]
PP42_RF	PROBEPOINT_SM	radio_mlb[44B7]single_brd[23]
PP43_RF	PROBEPOINT_SM	radio_mlb[44B7]single_brd[23]
PP44_RF	PROBEPOINT_SM	radio_mlb[44B7]single_brd[23]
PP45_RF	PROBEPOINT_SM	radio_mlb[44B7]single_brd[23]
PP46_RF	PROBEPOINT_SM	radio_mlb[44B7]single_brd[23]
PP47_RF	PROBEPOINT_SM	radio_mlb[44B7]single_brd[23]
Q1	TRA_MOSFET_NCHN_3P3_	single_brd[11B4]

	DFN1006H4-3	
Q2	TRA_MOSFET_PCHN_4P5_	single_brd[17A6]
	BGA	
Q4	TRA_MOSFET_PCHN_9P2_	single_brd[12C8]
	BGA	
Q6	TRA_MOSFET_NCHN_3P11	single_brd[18C4]
	_SM	
R1	RES_01005	single_brd[2C6]
R1_RF	RES_01005	radio_mlb[60D6]single_brd[23]
R2	RES_01005	single_brd[18A3]
R2_RF	RES_01005	radio_mlb[60D5]single_brd[23]
R3	RES_01005	single_brd[11A6]
R3_RF	RES_01005	radio_mlb[44A5]single_brd[23]
R4_RF	RES_01005	radio_mlb[48C4]single_brd[23]
R5	RES_01005	single_brd[3C4]
R5_RF	RES_201	radio_mlb[59B4]single_brd[23]
R6	RES_01005	single_brd[2B3]
R6_RF	RES_01005	radio_mlb[47B6]single_brd[23]
R7	RES_01005	single_brd[2C3]
R7_RF	RES_01005	radio_mlb[47A5]single_brd[23]
R8	RES_01005	single_brd[6B2]
R8_RF	RES_01005	radio_mlb[52D2]single_brd[23]
R9	RES_01005	single_brd[11A6]
R9_RF	RES_01005	radio_mlb[47B2]single_brd[23]
R10	RES_01005	single_brd[17C3]
R10_RF	RES_01005	radio_mlb[47D1]single_brd[23]
R11	RES_01005	single_brd[12D4]
R11_RF	RES_201	radio_mlb[62A5]single_brd[23]
R12	RES_01005	single_brd[3A6]
R13_RF	RES_201	radio_mlb[62B7]single_brd[23]
R14_RF	RES_01005	radio_mlb[65B7]single_brd[23]
R15	RES_01005	single_brd[17C7]
R15_RF	RES_01005	radio_mlb[65A7]single_brd[23]
R16	RES_01005	single_brd[3D4]
R16_RF	RES_01005	radio_mlb[65C5]single_brd[23]
R17	RES_01005	single_brd[3D2]
R17_RF	RES_01005	radio_mlb[65C3]single_brd[23]
R18	RES_01005	single_brd[3D2]
R18_RF	RES_01005	radio_mlb[65C3]single_brd[23]
R19	RES_01005	single_brd[3D2]
R19_RF	RES_201	radio_mlb[50D3]single_brd[23]
R20	RES_01005	single_brd[3A3]
R20_RF	RES_01005	radio_mlb[46C8]single_brd[23]
R21	RES_01005	single_brd[3D2]
R21_RF	RES_01005	radio_mlb[46C8]single_brd[23]
R22	RES_01005	single_brd[3A3]
R22_RF	RES_01005	radio_mlb[46B5]single_brd[23]
R23	RES_01005	single_brd[17C3]
R23_RF	RES_01005	radio_mlb[46D4]single_brd[23]
R24_RF	RES_01005	radio_mlb[46D4]single_brd[23]
R25_RF	RES_01005	radio_mlb[46D3]single_brd[23]
R26	RES_01005	single_brd[18C7]
R26_RF	RES_01005	radio_mlb[46D3]single_brd[23]
R27	RES_01005	single_brd[4A8]
R27_RF	RES_01005	radio_mlb[49C4]single_brd[23]
R28	RES_01005	single_brd[4A8]
R28_RF	RES_01005	radio_mlb[49C2]single_brd[23]
R29	RES_01005	single_brd[4A6]
R29_RF	RES_01005	radio_mlb[49C2]single_brd[23]
R30	RES_01005	single_brd[4A6]
R30_RF	RES_01005	radio_mlb[49C2]single_brd[23]
R31	RES_01005	single_brd[4A5]
R32	RES_01005	single_brd[4A5]
R32_RF	RES_01005	radio_mlb[57C5]single_brd[23]
R33	RES_01005	single_brd[4A4]
R33_RF	RES_01005	radio_mlb[58C7]single_brd[23]
R34	RES_01005	single_brd[4A4]
R34_RF	RES_01005	radio_mlb[58C6]single_brd[23]
R35	RES_01005	single_brd[15C5]
R35_RF	RES_01005	radio_mlb[55C3]single_brd[23]
R36	RES_01005	single_brd[18A4]
R36_RF	RES_0201	radio_mlb[54C3]single_brd[23]
R37	RES_01005	single_brd[7C5]
R37_RF	RES_201	radio_mlb[57B3]single_brd[23]
R38	RES_01005	single_brd[7C5]
R38_RF	RES_0201	radio_mlb[54C3]single_brd[23]
R39	RES_01005	single_brd[7C5]
R39_RF	RES_01005	radio_mlb[60C2]single_brd[23]
R40	RES_01005	single_brd[7B5]
R41	RES_01005	single_brd[7C5]
R42	RES_01005	single_brd[7C5]
R43	RES_201	single_brd[16D5]
R43_RF	RES_01005	radio_mlb[65B7]single_brd[23]
R44	RES_201	single_brd[16D5]
R44_RF	RES_01005	radio_mlb[65A7]single_brd[23]
R45	RES_201	single_brd[11B4]
R45_RF	RES_01005	radio_mlb[65B3]single_brd[23]
R46	RES_01005	single_brd[19C3]
R47	RES_01005	single_brd[18A6]
R48	RES_01005	single_brd[18A6]
R49	RES_01005	single_brd[18A6]
R50	RES_01005	single_brd[17C7]
R50_RF	RES_01005	radio_mlb[49C4]single_brd[23]
R51	RES_01005	single_brd[18B7]
R51_RF	RES_01005	radio_mlb[65A6]single_brd[23]
R52	RES_01005	single_brd[3C8]
R52_RF	RES_01005	radio_mlb[65A6]single_brd[23]
R53	RES_01005	single_brd[3B2]
R53_RF	RES_201	radio_mlb[50D8]single_brd[23]
R54	RES_01005	single_brd[3B2]
R55	RES_01005	single_brd[6B5]
R57	THERMISTER_0201	single_brd[13A8]
R58	RES_201	single_brd[17A7]
R60	RES_01005	single_brd[19B3]
R61	RES_01005	single_brd[18A6]
R62	RES_01005	single_brd[18A6]
R64_RF	RES_01005	radio_mlb[53D4]single_brd[23]
R65	RES_01005	single_brd[13C3]
R65_RF	RES_01005	radio_mlb[53B4]single_brd[23]
R67	RES_01005	single_brd[2B7]
R70	RES_01005	single_brd[12D8]
R71	RES_01005	single_brd[2C3]
R72	RES_01005	single_brd[4D8]
R73	RES_01005	single_brd[4D8]
R78	RES_01005	single_brd[6C8]
R79	RES_01005	single_brd[18B5]
R82	RES_01005	single_brd[6C6]
R83	RES_01005	single_brd[16D5]
R84	RES_01005	single_brd[16C5]
R85	RES_01005	single_brd[11B3]
R86	RES_01005	single_brd[18C5]
R87	RES_01005	single_brd[13B3]
R89	RES_01005	single_brd[19C7]
R90	THERMISTER_0201	single_brd[13B8]
R91	RES_01005	single_brd[19C3]
R93	RES_01005	single_brd[3B2]
R94	RES_01005	single_brd[11A7]
R95	RES_01005	single_brd[11A7]
R100	RES_01005	single_brd[10B8]
R102	RES_01005	single_brd[9B3]
R103	RES_01005	single_brd[9B3]
R107	RES_01005	single_brd[17D7]
R108	THERMISTER_0201	single_brd[13C8]
R109	RES_0201	single_brd[13B6]
R110	THERMISTER_0201	single_brd[13B8]
R112	RES_01005	single_brd[13B3]
R113	RES_01005	single_brd[13B3]
R114	RES_01005	single_brd[13B3]
R115	RES_01005	single_brd[12C4]
R116	RES_201	single_brd[13D4]
R117	RES_01005	single_brd[12C4]
R119	RES_01005	single_brd[12B1]
R121	RES_01005	single_brd[18C4]
R122	RES_01005	single_brd[15C4]
R124	RES_01005	single_brd[15C4]
R125	RES_01005	single_brd[11C7]
R126	RES_01005	single_brd[15C3]
R127	RES_01005	single_brd[15C3]
R128	RES_201	single_brd[15C3]
R129	RES_01005	single_brd[15C7]
R130	RES_01005	single_brd[17A3]
R131	RES_01005	single_brd[13C3]
R132	RES_01005	single_brd[11B4]
R133	RES_01005	single_brd[11B4]
R134	RES_01005	single_brd[18B7]
R135	RES_01005	single_brd[17C2]
R136	RES_01005	single_brd[18B7]
R137	RES_01005	single_brd[6C5]
R141	RES_01005	single_brd[21A5]
R143	RES_01005	single_brd[6C5]
R145	RES_01005	single_brd[10C3]
R146	RES_01005	single_brd[3B8]
R147	RES_01005	single_brd[3B5]
R148	RES_01005	single_brd[3B5]
R149	RES_01005	single_brd[3B5]
R150	RES_01005	single_brd[3B4]
R151	RES_01005	single_brd[18D4]
R152	RES_01005	single_brd[19C3]
R153	RES_01005	single_brd[6B8]
R154	RES_01005	single_brd[20C7]
R155	RES_01005	single_brd[13C3]
R156	RES_01005	single_brd[13C3]
R157	RES_01005	single_brd[8D2]
R158	RES_01005	single_brd[16B5]
R159	RES_01005	single_brd[16B4]
R160	RES_01005	single_brd[6C2]
R161	RES_01005	single_brd[6C2]
R162	RES_01005	single_brd[3B8]
R163	RES_01005	single_brd[2B3]
R164	RES_01005	single_brd[2B3]
R165	RES_01005	single_brd[17A3]
R166	RES_01005	single_brd[17A3]
R167	RES_01005	single_brd[17A3]
R168	RES_01005	single_brd[17A3]
R169	RES_01005	single_brd[21C6]
R1400	RES_01005	single_brd[14B2]
R1401	RES_01005	single_brd[14A2]
R1402	RES_01005	single_brd[14A3]
SH1	SHLD_1P_SM	single_brd[22C7]
SH2	SHLD_1P_SM	single_brd[22C7]
SH3	SHLD_1P_SM	single_brd[22B7]
SH4	SHLD_1P_SM	single_brd[22B7]
SP1	SPRING_CLIP_1P_CLIP-	single_brd[22C5]
	SM	
SP1_RF	SMT_PAD_SM-NSP	radio_mlb[62D8]single_brd[23]
SP2_RF	SMT_PAD_SM-NSP	radio_mlb[61B7]single_brd[23]
SW1_RF	SWI_SPDT_BGS12SL6_TS	radio_mlb[59C3]single_brd[23]
	LP6-2	
TP1	TP_TP-P6	single_brd[22D4]
TP1_RF	TP_TP-P6	radio_mlb[62D4]single_brd[23]
TP2	TP_TP-P90	single_brd[22D4]
TP4	TP_TP-P6	single_brd[22C4]
TP5	TP_TP-P6	single_brd[22C4]
TP6	TP_TP-P6	single_brd[22C4]
TP7	TP_TP-P6	single_brd[22C4]
TP8	TP_TP-P6	single_brd[22B4]
TP9	TP_TP-P6	single_brd[22B4]
TP10	TP_TP-P6	single_brd[22B2]
TP12	TP_TP-P90	single_brd[22D4]
TP15	TP_TP-P6	single_brd[22B2]
TP16	TP_TP-P6	single_brd[22B2]
TP17	TP_TP-P6	single_brd[22B2]
TP18	TP_TP-P6	single_brd[22A4]
TP19	TP_TP-P6	single_brd[22A4]
TP20	TP_TP-P6	single_brd[22A4]
TP21	TP_TP-P55	single_brd[22C2]
TP22	TP_TP-P55	single_brd[22C2]
TP23	TP_TP-P55	single_brd[22C2]
TP24	TP_TP-P55	single_brd[22C2]
TP26	TP_TP-P6	single_brd[22C2]
TP27	TP_TP-P6	single_brd[22C2]
TP28	TP_TP-P6	single_brd[22B4]
TP29	TP_TP-P6	single_brd[22B4]
TP32	TP_TP-P6	single_brd[22B2]
U1	H6P_FCMSP	single_brd[3D3]
U1	H6P_FCMSP	single_brd[3D3 3D7]
U1	H6P_FCMSP	single_brd[4D2 4D5 4D7]
U1	H6P_FCMSP	single_brd[5D2 5D4 5D8 5D7]
U1	H6P_FCMSP	single_brd[6C7]
U1	H6P_FCMSP	single_brd[7C3 7C7]
U1_RF	MODEM_MDM9615M_1_BGA	radio_mlb[47D2 47C7 47D4 47B4]single_brd[23]
U1_RF	MODEM_MDM9615M_1_BGA	radio_mlb[48C3 48D7]single_brd[23]
U2	CBTL1608A1_WCSP	single_brd[16D4]
U2_RF	PM8018_WLNSP105_BGA	radio_mlb[45C5]single_brd[23]
U2_RF	PM8018_WLNSP105_BGA	radio_mlb[46B7 46C7 46D3 46B4]single_brd[23]
U3	ISL97751_WLCSP	single_brd[14D5]
U3_RF	WTR1605_SM	radio_mlb[49D4 49B7 49D7 49C7]single_brd[23]
U3_RF	WTR1605_SM	radio_mlb[50B3]single_brd[23]
U4	FLASH_XGX8_60LGA_LGA	single_brd[6C4]
	-12X17	
U4_RF	RF1629_BGA	radio_mlb[53D2]single_brd[23]
U5	74AUP2G3404_SOT1115	single_brd[18A3]
U5_RF	SUPPR_TPD4E101_SON4	radio_mlb[44A3]single_brd[23]
U6	CAT24C08_WLCSP4_WLCS	single_brd[16B5]
	P	
U6_RF	FLASH_MX25U1635E_WLC	radio_mlb[48A7]single_brd[23]
	SP	
U7	AMBER_PMC_FCCSP-0.84	single_brd[12D6]
	MM	
U7	AMBER_PMC_FCCSP-0.84	single_brd[13C2 13C5]
	MM	
U7_RF	RF1112_WLCSP	radio_mlb[62D5]single_brd[23]
U8	ITG3600_SM	single_brd[20C2]
U8_RF	MOD_WIFI_BT_IMPERIAL	radio_mlb[65C5]single_brd[23]
	_LGA60_LGA	
U9	OSCAR_WLCSP52_WLCSP	single_brd[20C6 20D6]
U9_RF	FIL_DIPLEXER_885041_	radio_mlb[62C4]single_brd[23]
	LGA	
U10_RF	SKY77352_LGA	radio_mlb[57C4]single_brd[23]
U11_RF	MAX77270A_WLP	radio_mlb[58C5]single_brd[23]
U12	CUMULUS_BGA63_WLBGA	single_brd[18C6]
U12_RF	FIL_DIPLEXER_HILOBAN	radio_mlb[62C6]single_brd[23]
	D_SM	
U13	TPS22924_CSP	single_brd[21C6]
U13_RF	SWI_SPDT_CXA4011GC_X	radio_mlb[62C2]single_brd[23]
	FLGA	
U14_RF	TSINGTAO_LGA	radio_mlb[60C4]single_brd[23]
U15	SAGE2_1_CSP	single_brd[18D3]
U15_RF	AMP_DUPLEXER_BAND720	radio_mlb[55C4]single_brd[23]
	_LGA30_LGA	
U16	AK8963C_CSP-POP	single_brd[20A6]
U16_RF	FILTER_SAW_1IN4OUT_L	radio_mlb[51A3]single_brd[23]
	GA	
U17	OPEL_WLCSP	single_brd[15B5]
U17_RF	SWI_LMSP3XQQD67_LGA	radio_mlb[59B6]single_brd[23]
U18	BMA282_LGA	single_brd[20B2]
U18_RF	FILTER_4P12_LLP	radio_mlb[62D3]single_brd[23]
U20_RF	AMP_SKY65716_LGA	radio_mlb[61C4]single_brd[23]
U21	CS42L67_WLCSP	single_brd[9C5]
U21	CS42L67_WLCSP	single_brd[10D2 10C6]
U22	CS35L19B_WLCSP	single_brd[15C6]
U22_RF	FIL_BAW_885034_LGA	radio_mlb[60B6]single_brd[23]
U23	LM3534_BGA	single_brd[14B7]
U23_RF	AMP_DUPLEXER_BAND23_	radio_mlb[54C5]single_brd[23]
	LGA30_LGA	
U24_RF	SWI_SPDT_BGS12SL6_TS	radio_mlb[52B6]single_brd[23]
	LP6-2	
U25	74LVC1G34_SOT1226	single_brd[3A3]
U25_RF	AMP_PENTA_BAND_LGA26	radio_mlb[53C6]single_brd[23]
	_LGA	
U26	74LVC1G34_SOT1226	single_brd[3A3]
U26_RF	FIL_DIPLEXER_B38_B40	radio_mlb[51B3]single_brd[23]
	_9P1_LGA	
U27_RF	MOD_LMSWFKJM_LGA	radio_mlb[53B3]single_brd[23]
U58_RF	AMP_DUPLEXER_BAND58_	radio_mlb[56C5]single_brd[23]
	LGA30_LGA	
U1400	LT3460EDC_DFN	single_brd[14B3]
XW1	SHORT10LP1_WITH_ALTS	single_brd[12A7]
	_SHORT-10L-0.1MM-SM	
XW1_RF	SHORT10LP25_WITH_ALT	radio_mlb[46B6]single_brd[23]
	S_SHORT-10L-0.25MM-S	
	M	
XW2	SHORT_SM	single_brd[6D2]
XW2_RF	SHORT10LP25_WITH_ALT	radio_mlb[46B6]single_brd[23]
	S_SHORT-10L-0.25MM-S	
	M	
XW3	SHORT10LP1_WITH_ALTS	single_brd[12C2]
	_SHORT-10L-0.1MM-SM	
XW3_RF	SHORT10LP25_WITH_ALT	radio_mlb[46B6]single_brd[23]
	S_SHORT-10L-0.25MM-S	
	M	
XW4	SHORT10LP1_WITH_ALTS	single_brd[13B6]
	_SHORT-10L-0.1MM-SM	
XW4_RF	SHORT10LP25_WITH_ALT	radio_mlb[46B6]single_brd[23]
	S_SHORT-10L-0.25MM-S	
	M	
XW5	SHORT10LP1_WITH_ALTS	single_brd[8C3]
	_SHORT-10L-0.1MM-SM	
XW6	SHORT10LP1_WITH_ALTS	single_brd[13B6]
	_SHORT-10L-0.1MM-SM	
XW6_RF	SHORT10LP25_WITH_ALT	radio_mlb[58B4]single_brd[23]
	S_SHORT-10L-0.25MM-S	
	M	
XW7	SHORT_SM	single_brd[11C3]
XW8	SHORT10LP1_WITH_ALTS	single_brd[13B6]
	_SHORT-10L-0.1MM-SM	
XW8_RF	SHORT_SHORT-01005	radio_mlb[65C7]single_brd[23]
XW9	SHORT10LP1_WITH_ALTS	single_brd[13B6]
	_SHORT-10L-0.1MM-SM	
XW9_RF	SHORT_LAYER_9_SHORT-	radio_mlb[65D6]single_brd[23]
	L9-SM	
XW10	SHORT_SM	single_brd[12B1]
XW10_RF	SHORT10LP1_WITH_ALTS	radio_mlb[46A4]single_brd[23]
	_SHORT-10L-0.1MM-SM	
XW11	SHORT10LP1_WITH_ALTS	single_brd[13B6]
	_SHORT-10L-0.1MM-SM	
XW11_RF	SHORT10LP25_WITH_ALT	radio_mlb[58B4]single_brd[23]
	S_SHORT-10L-0.25MM-S	
	M	
XW12	SHORT10LP25_WITH_ALT	single_brd[22D7]
	S_SHORT-10L-0.25MM-S	
	M	
XW12_RF	SHORT10LP1_WITH_ALTS	radio_mlb[44A7]single_brd[23]
	_SHORT-10L-0.1MM-SM	
XW13	SHORT_SM	single_brd[17D4]
XW13_RF	SHORT10LP1_WITH_ALTS	radio_mlb[44A7]single_brd[23]
	_SHORT-10L-0.1MM-SM	
XW14	SHORT10LP1_WITH_ALTS	single_brd[13B6]
	_SHORT-10L-0.1MM-SM	
XW14_RF	SHORT10LP1_WITH_ALTS	radio_mlb[44A7]single_brd[23]
	_SHORT-10L-0.1MM-SM	
XW15	SHORT10LP1_WITH_ALTS	single_brd[13B6]
	_SHORT-10L-0.1MM-SM	
XW15_RF	SHORT10LP1_WITH_ALTS	radio_mlb[44A7]single_brd[23]
	_SHORT-10L-0.1MM-SM	
XW16_RF	SHORT10LP25_WITH_ALT	radio_mlb[46A6]single_brd[23]
	S_SHORT-10L-0.25MM-S	
	M	
XW17_RF	SHORT10LP1_WITH_ALTS	radio_mlb[45C5]single_brd[23]
	_SHORT-10L-0.1MM-SM	
XW18	SHORT10LP1_WITH_ALTS	single_brd[12D2]
	_SHORT-10L-0.1MM-SM	
XW20	SHORT10LP1_WITH_ALTS	single_brd[12D2]
	_SHORT-10L-0.1MM-SM	
XW20_RF	SHORT_LAYER_9_SHORT-	radio_mlb[65D6]single_brd[23]
	L9-SM	
XW21	SHORT_SM	single_brd[17B5]
XW22	SHORT_SM	single_brd[17B5]
XW25	SHORT10LP1_WITH_ALTS	single_brd[17B6]
	_SHORT-10L-0.1MM-SM	
XW28	SHORT_SM	single_brd[13B6]
XW29	SHORT_SM	single_brd[13B6]
XW31	SHORT_SM	single_brd[21C4]
XW33	SHORT10LP1_WITH_ALTS	single_brd[13B6]
	_SHORT-10L-0.1MM-SM	
XW34	SHORT_SM	single_brd[15A5]
XW35	SHORT_SM	single_brd[15D6]
XW36	SHORT_SM	single_brd[18D5]
XW37	SHORT_SM	single_brd[18B5]
XW39	SHORT_SM	single_brd[15C3]
XW40	SHORT_SM	single_brd[15C3]
XW41	SHORT10LP1_WITH_ALTS	single_brd[8C3]
	_SHORT-10L-0.1MM-SM	
XW42	SHORT10LP1_WITH_ALTS	single_brd[11C3]
	_SHORT-10L-0.1MM-SM	
XW43	SHORT10LP1_WITH_ALTS	single_brd[10D7]
	_SHORT-10L-0.1MM-SM	
XW44	SHORT10LP1_WITH_ALTS	single_brd[2C1]
	_SHORT-10L-0.1MM-SM	
XW45	SHORT10LP1_WITH_ALTS	single_brd[17B6]
	_SHORT-10L-0.1MM-SM	
XW46	SHORT10LP1_WITH_ALTS	single_brd[11C2]
	_SHORT-10L-0.1MM-SM	
XW47_RF	SHORT10LP25_WITH_ALT	radio_mlb[58C5]single_brd[23]
	S_SHORT-10L-0.25MM-S	
	M	
XW48	SHORT10LP1_WITH_ALTS	single_brd[10B5]
	_SHORT-10L-0.1MM-SM	
XW49	SHORT_SM	single_brd[15A5]
Y1	CRYSTAL_4PIN1_1.60X1	single_brd[2C2]
	.20MM-SM	
Y1_RF	CRYSTAL_4PIN2_2.0X1.	radio_mlb[46B4]single_brd[23]
	60MM	
Y2	CRYSTAL_2012	single_brd[12A7]

1. ALL RESISTANCE VALUES ARE IN OHMS, 0.1 WATT +/- 5%.
2. ALL CAPACITANCE VALUES ARE IN MICROFARADS.
3. ALL CRYSTALS & OSCILLATOR VALUES ARE IN HERTZ.

REV	ECN	DESCRIPTION OF REVISION	CK APPD / DATE
1	0001625056	ENGINEERING RELEASED	2012-09-11

X152 RADIO_MLB SUBDESIGN PROTO2 8/30/2012

PDF PAGE	CSA PAGE	CONTENTS
2	2	AP INTERFACE & DEBUG CONNECTORS
3	3	PMU (1 0F 2)
4	4	PMU (2 OF 2)
5	5	BASEBAND (1 OF 2)
6	6	BASEBAND (2 OF 2)
7	7	RF TRANSCEIVER (1 0F 2)
8	8	RF TRANSCEIVER (2 OF 2)
9	9	RX MATCHING
10	10	TX INTERSTAGE FILTERS
11	11	BAND 1/34/39/38/40 TX
12	12	BAND 2/3 PAD
13	13	BAND 7/20 PAD
14	14	BAND 5/8 PAD
15	15	2G PA
16	16	PA DCDC CONVERTER
17	17	PRIMARY ASM
18	18	RX DIVERSITY
19	19	GPS
20	20	ANTENNA FEEDS
21	21	SWITCH LOGIC
22	22	BLANK
23	23	WIFI/BT

BOARD_ID BOM OPTIONS

PART#	QTY	DESCRIPTION	REFERENCE DESIGNATOR(S)	CRITICAL	BOM OPTION
118S0621	1	1.00M 1% 01005	R25_RF	Y	N51_CFG_A
118S0732	1	50K 1% 01005	R26_RF	Y	N51_CFG_A
117S0159	1	470K 5% 01005	R25_RF	Y	N51_CFG_B
118S0626	1	100K 1% 01005	R26_RF	Y	N51_CFG_B
118S0626	1	100K 1% 01005	R25_RF	Y	N53_CFG_A
118S0726	1	162K 1% 01005	R26_RF	Y	N53_CFG_A
118S0626	1	100K 1% 01005	R25_RF	Y	N53_CFG_B
118S0623	1	267K 1% 01005	R26_RF	Y	N53_CFG_B
118S0695	1	255K 1% 01005	R25_RF	Y	N48_CFG_A
118S0626	1	100K 1% 01005	R26_RF	Y	N48_CFG_A
118S0689	1	147K 1% 01005	R26_RF	Y	N48_CFG_B
118S0626	1	100K 1% 01005	R26_RF	Y	N48_CFG_B
118S0626	1	100K 1% 01005	R25_RF	Y	N49_CFG_A
118S0650	1	499K 1% 01005	R26_RF	Y	N49_CFG_A
118S0732	1	50K 1% 01005	R25_RF	Y	N49_CFG_B
118S0621	1	1.00M 1% 01005	R26_RF	Y	N49_CFG_B

SCH :951-2770
BOM :639-3973
BOARD :820-3382

PART#	QTY	DESCRIPTION	REFERENCE DESIGNATOR(S)	CRITICAL	BOM OPTION
951-2446	1	X152_RADIO_MLB	SCH	Y	
825-2029	1	EEE FOR 939-0308	EEEE_????	Y	NA

DRAWING TITLE: TABLE OF CONTENTS

Apple Inc.

DRAWING NUMBER: 051-9681 SIZE: D
REVISION: 1.0.0
BRANCH:
PAGE: 1 OF 27
SHEET: 44 OF 70

NOTICE OF PROPRIETARY PROPERTY:
THE INFORMATION CONTAINED HEREIN IS THE PROPRIETARY PROPERTY OF APPLE INC.
THE POSESSOR AGREES TO THE FOLLOWING:
I TO MAINTAIN THIS DOCUMENT IN CONFIDENCE
II NOT TO REPRODUCE OR COPY IT
III NOT TO REVEAL OR PUBLISH IT IN WHOLE OR PART
IV ALL RIGHTS RESERVED

CONFIDENTIAL AND PROPRIETARY APPLE SYSTEM DESIGN. FOR REFERENCE PURPOSE ONLY - NOT A CHANGE REQUEST

AP INTERFACE & DEBUG CONNECTORS

AP CONNECTIONS

IN = FROM AP
OUT = TO AP

16 15 14 13 12 11 3	2	PP_BATT_VCC_CONN	OUT
	23	PP_VCC_MAIN_WLAN	OUT
	6	TX_GTR_THRESH	OUT
	4	2 BB_RST_L	IN
	6	2 RESET_DET_L	OUT
	4	2 RADIO_ON_L	IN
	4	2 RESET_PMU_L	IN
	6	2 HOST_WAKE_BB	OUT
		2 RF_RESET_L	OUT
	6	2 PBL_RUN_BB_HSIC1_RDY	OUT
	23	2 WLAN_HSIC3_RESUME	OUT
	6	AP_WAKE_MODEM	OUT
	6	2 AP_HSIC1_RDY	IN
	5	2 50_HSIC_BB_DATA	IO
	5	2 50_HSIC_BB_STROBE	IO
	6	BB_HSIC1_REMOTE_WAKE	OUT
	6	2 BB_UART_TXD	OUT
	6	2 BB_UART_RXD	IN
	6	2 BB_UART_RTS_L	OUT
	6	2 BB_UART_CTS_L	IN
	5	2 BB_USB_VBUS	IN
	5	2 90_BB_USB_D_P	IO
	5	2 90_BB_USB_D_N	IO
	6	2 BB_I2S_CLK	IN
	6	2 BB_I2S_WS	IN
	6	2 BB_I2S_TXD	OUT
	6	2 BB_I2S_RXD	IN
	6	PP_SYNC	OUT
	23	PP_WL_BT_VDDIO_AP	IN
	23	2 CLK32K_AP	IN
	23	2 WLAN_REG_ON	IN
	23	WLAN_UART_TXD	OUT
	23	WLAN_UART_RXD	IN
	23	HOST_WAKE_WLAN	OUT
	23	2 WLAN_HSIC3_DEVICE_RDY	OUT
	23	2 AP_HSIC3_RDY	IN
	23	2 50_HSIC_WLAN_DATA	IO
	23	2 50_HSIC_WLAN_STROBE	IO
	23	HOST_WAKE_BT	OUT
	23	2 BT_WAKE	IN
	23	2 BT_UART_TXD	OUT
	23	2 BT_UART_RXD	IN
	23	BT_UART_RTS_L	OUT
	23	BT_UART_CTS_L	IN
	23	2 BT_REG_ON	IN
	23	BT_PCM_CLK	IO
	23	BT_PCM_SYNC	IO
	23	BT_PCM_OUT	IO
	23	BT_PCM_IN	IO
	6	2 LAT_SW1_CTL	OUT
	6	LAT_SW2_CTL	OUT
	6	LAT_SW3_CTL	OUT
	20	6 BB_SPI_TO_PAC_CS	OUT
	20	6 BB_SPI_TO_PAC_DATA_MOSI	OUT
	20	6 BB_SPI_TO_PAC_CLK	OUT
	20	6 PAC_TO_BB_SPI_DATA_MISO	IN
20 18 17 11 10	3	PP_LDO14_2V65	OUT
	5	2 BB_JTAG_TCK	IN
	5	2 BB_JTAG_TDI	IN
	5	2 BB_JTAG_TMS	IN
	5	2 BB_JTAG_TRST_L	IN
	5	2 BB_JTAG_TDO	OUT
		2 ADC_SMPS1_MSMC_1V05	OUT
		2 ADC_SMPS3_MSME_1V8	OUT
		2 ADC_LDO6_RUIM_1V8	OUT
		2 ADC_LVS1	OUT
	6	BB_TPC_GPIO	OUT
	23	6 OSCAR_CONTEXT_A	IN
	23	6 OSCAR_CONTEXT_B	IN
	6	TX_GTR_THRESH_OD	OUT
	6	BB_I2S2_CLK	OUT
	6	BB_I2S2_WS	OUT
	6	BB_I2S_MCLK	OUT
	6	BB_I2S2_RXD	IN

PROBE POINTS

PP1_RF	P4MM SM PP 1	BB_ERROR_FLAG	6
PP2_RF	P4MM SM PP 1	SLEEP_CLK_32K	4 5
PP3_RF	P4MM SM PP 1	PMIC_SSBI	4 5
PP11_RF	P4MM SM PP 1	CLK32K_AP	2 23
PP14_RF	P4MM SM PP 1	AP_HSIC3_RDY	2 23
PP15_RF	P4MM SM PP 1	WLAN_HSIC3_DEVICE_RDY	2 23
PP18_RF	P4MM SM PP 1	WLAN_HSIC3_RESUME	2 23
PP19_RF	P4MM SM PP 1	WTR_SSBI_TX_GPS	6 7
PP20_RF	P4MM SM PP 1	WTR_SSBI_PRX_DRX	6 7
PP21_RF	P4MM SM PP 1	WTR_RX_ON	6 7
PP22_RF	P4MM SM PP 1	WTR_RF_ON	6 7
PP40_RF	P4MM SM PP 1	WLAN_COEX_TXD	23
PP41_RF	P4MM SM PP 1	LTE_COEX_TXD	6 23
PP42_RF	P4MM SM PP 1	50_HSIC_BB_STROBE	2 5
PP43_RF	P4MM SM PP 1	50_HSIC_BB_DATA	2 5
PP44_RF	P4MM SM PP 1	50_HSIC_WLAN_STROBE	2 23
PP45_RF	P4MM SM PP 1	50_HSIC_WLAN_DATA	2 23
PP46_RF	P4MM SM PP 1	BT_UART_TXD	2 23
PP47_RF	P4MM SM PP 1	BT_UART_RXD	2 23
PP4_RF	P4MM SM PP 1	BB_I2S_CLK	2 6
PP5_RF	P4MM SM PP 1	BB_I2S_WS	2 6
PP6_RF	P4MM SM PP 1	BB_I2S_RXD	2 6
PP7_RF	P4MM SM PP 1	BB_I2S_TXD	2 6

DEBUG CONNECTOR

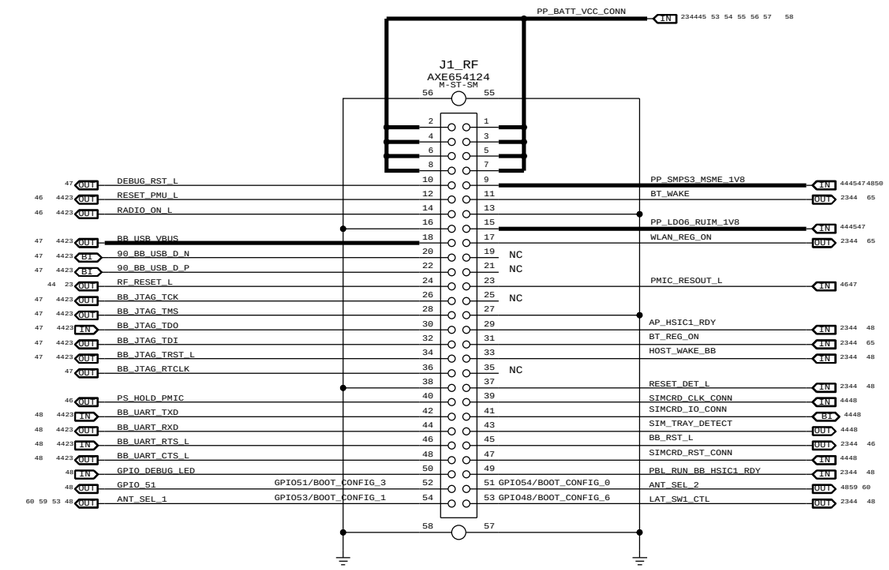

BOOT OPTIONS	BOOT_CONFIG SW REGISTER VALUE	GPIO/BOOT_CONFIG CONFIGURATION							
		6	5	4	3	2	1	0	
		47	48	49	50	51	52	53	54	55
BOOT_DEFAULT_OPTION	0X00	X	0	0	0	0	0	0	0	X
BOOT_NAND_OPTION	0X01	X	1	0	0	0	0	0	1	X
BOOT_HSIC_OPTION	0X02	X	1	0	0	0	0	1	0	X
BOOT_USB_OPTION	0X03	X	1	0	0	0	0	1	1	X
ENABLE SAHARA PROTOCOL	0X08	X	1	0	0	1	0	X	X	X

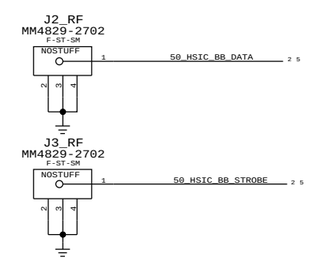

SIM CARD CONNECTOR

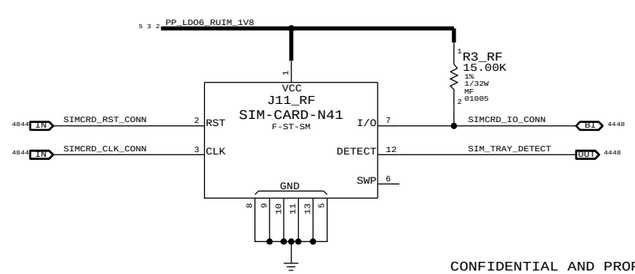

SIM CARD ESD PROTECTION

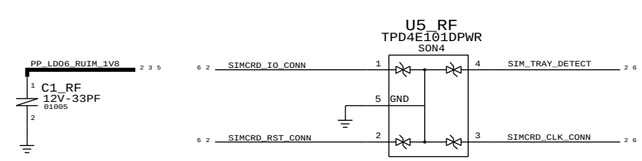

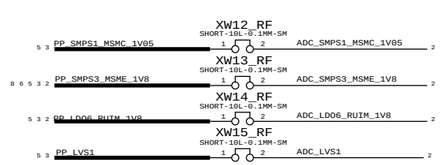

CONFIDENTIAL AND PROPRIETARY APPLE SYSTEM DESIGN. FOR REFERENCE PURPOSE ONLY - NOT A CHANGE REQUEST

PAGE TITLE
AP INTERFACE & DEBUG CONNECTORS

Apple Inc.

DRAWING NUMBER 051-9681 SIZE D
REVISION 1.0.0
BRANCH
PAGE 2 OF 27
SHEET 45 OF 70

NOTICE OF PROPRIETARY PROPERTY:
THE INFORMATION CONTAINED HEREIN IS THE PROPRIETARY PROPERTY OF APPLE INC.
THE POSESSOR AGREES TO THE FOLLOWING:
I TO MAINTAIN THIS DOCUMENT IN CONFIDENCE
II NOT TO REPRODUCE OR COPY IT
III NOT TO REVEAL OR PUBLISH IT IN WHOLE OR PART
IV ALL RIGHTS RESERVED

PMU (1 OF 2)

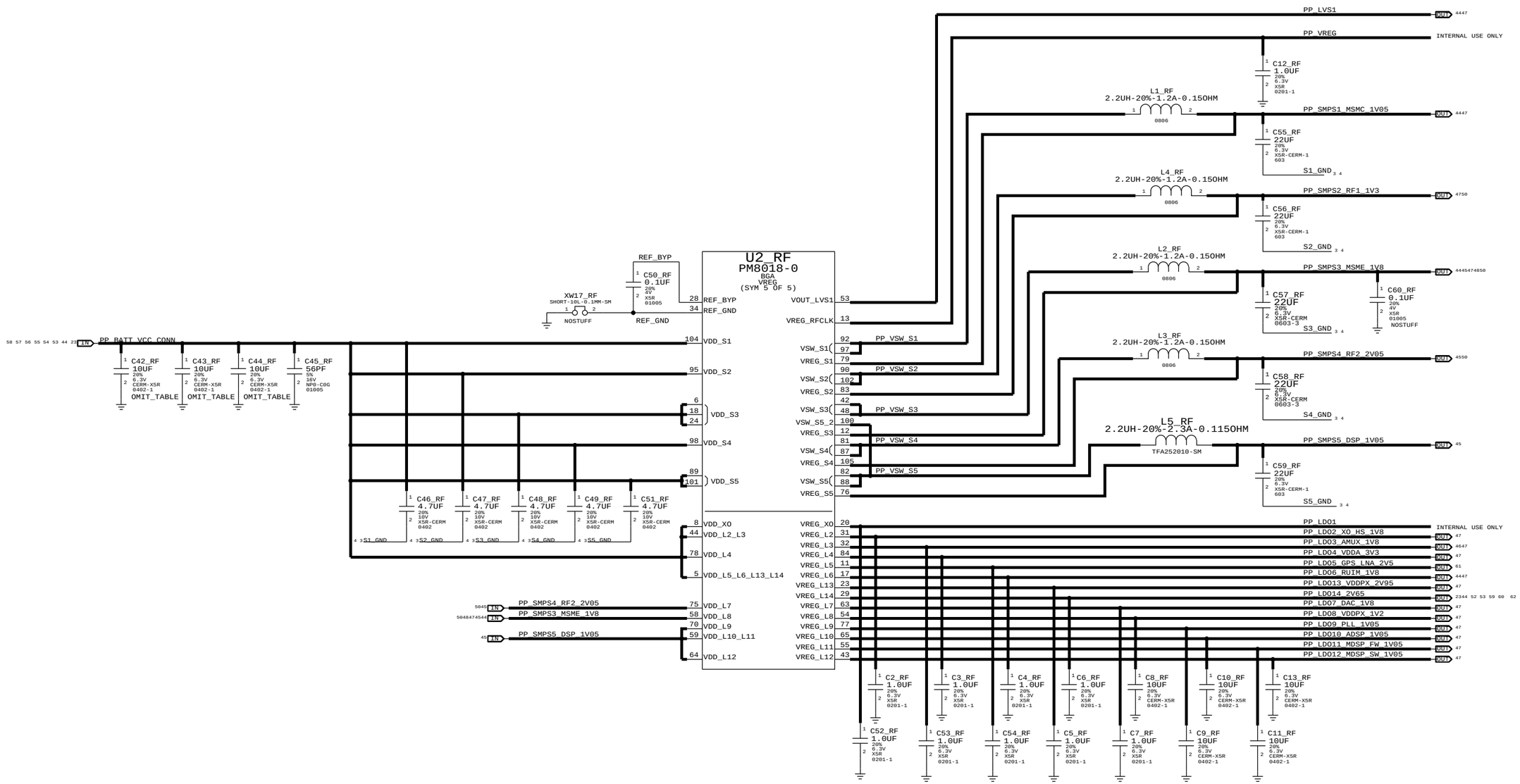

CONFIDENTIAL AND PROPRIETARY APPLE SYSTEM DESIGN. FOR REFERENCE PURPOSE ONLY - NOT A CHANGE REQUEST

PAGE TITLE	PMU (1 0F 2)
Apple Inc.	DRAWING NUMBER 051-9681 SIZE D
	REVISION 1.0.0
NOTICE OF PROPRIETARY PROPERTY: THE INFORMATION CONTAINED HEREIN IS THE PROPRIETARY PROPERTY OF APPLE INC. THE POSESSOR AGREES TO THE FOLLOWING: I TO MAINTAIN THIS DOCUMENT IN CONFIDENCE II NOT TO REPRODUCE OR COPY IT III NOT TO REVEAL OR PUBLISH IT IN WHOLE OR PART IV ALL RIGHTS RESERVED	BRANCH
	PAGE 3 OF 27
	SHEET 46 OF 70

PMU (2 OF 2)

PA_ID	CONFIG
1.1V	CONFIG A
1.3V	CONFIG B
1.5V	CONFIG C
1.7V	CONFIG D

BOARD_ID	REVISION
0.7V	PROTO1
0.9V	PROTO2
1.1V	EVT1
1.3V	EVT2
1.5V	DVT
1.7V	PVT

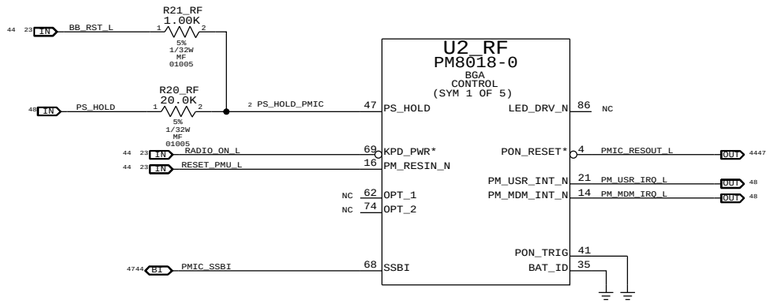

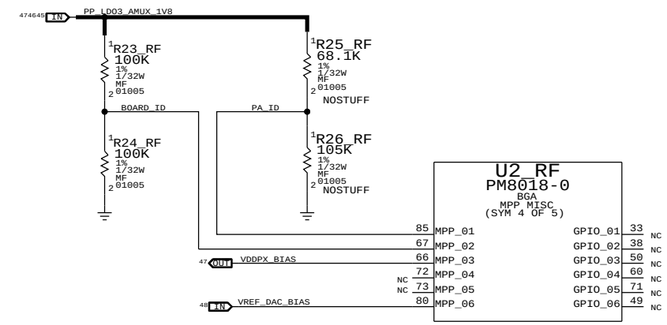

AP SECTION NEEDS ITS OWN THERMISTOR PLACED NEAR THE PA'S.

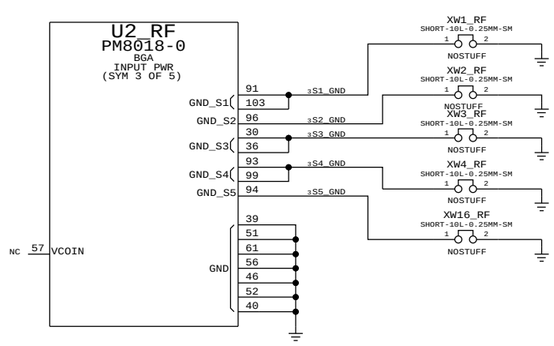

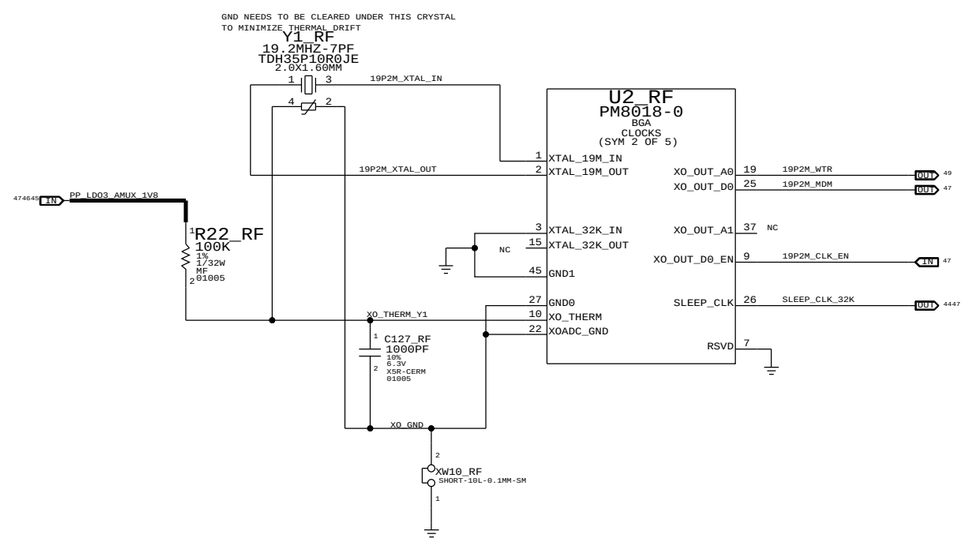

CONFIDENTIAL AND PROPRIETARY APPLE SYSTEM DESIGN. FOR REFERENCE PURPOSE ONLY - NOT A CHANGE REQUEST

PAGE TITLE: PMU (2 OF 2)

Apple Inc.

DRAWING NUMBER: 051-9681 SIZE: D

REVISION: 1.0.0

BRANCH:

PAGE: 4 OF 27

SHEET: 47 OF 70

NOTICE OF PROPRIETARY PROPERTY:
THE INFORMATION CONTAINED HEREIN IS THE PROPRIETARY PROPERTY OF APPLE INC.
THE POSESSOR AGREES TO THE FOLLOWING:
I TO MAINTAIN THIS DOCUMENT IN CONFIDENCE
II NOT TO REPRODUCE OR COPY IT
III NOT TO REVEAL OR PUBLISH IT IN WHOLE OR PART
IV ALL RIGHTS RESERVED

BASEBAND (1 OF 2)

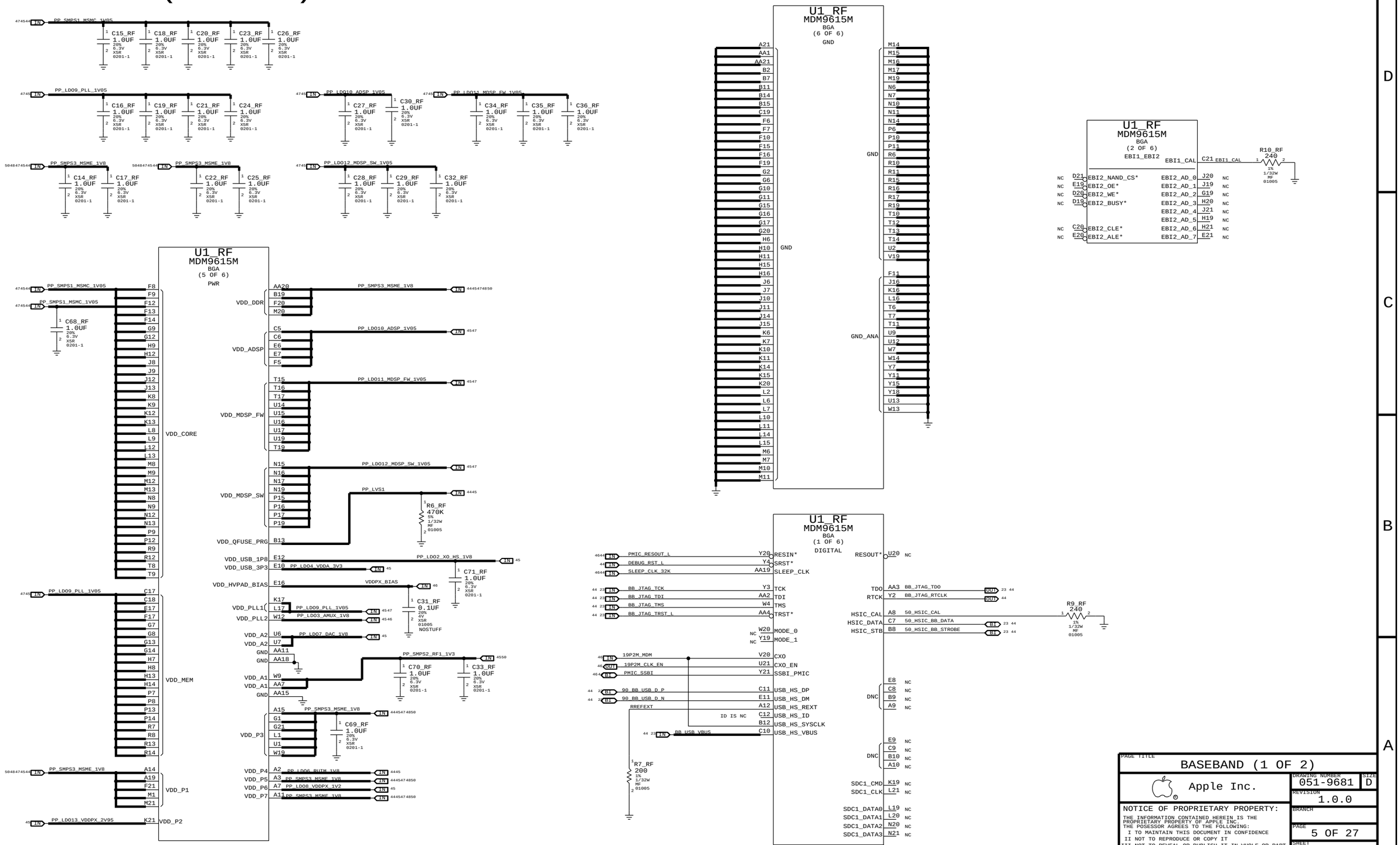

PAGE TITLE	BASEBAND (1 OF 2)
	Apple Inc.
DRAWING NUMBER	051-9681
SIZE	D
REVISION	1.0.0
BRANCH	
PAGE	5 OF 27
SHEET	48 OF 70

NOTICE OF PROPRIETARY PROPERTY:
THE INFORMATION CONTAINED HEREIN IS THE PROPRIETARY PROPERTY OF APPLE INC.
THE POSESSOR AGREES TO THE FOLLOWING:
I TO MAINTAIN THIS DOCUMENT IN CONFIDENCE
II NOT TO REPRODUCE OR COPY IT
III NOT TO REVEAL OR PUBLISH IT IN WHOLE OR PART
IV ALL RIGHTS RESERVED

CONFIDENTIAL AND PROPRIETARY APPLE SYSTEM DESIGN. FOR REFERENCE PURPOSE ONLY - NOT A CHANGE REQUEST

BASEBAND (2 OF 2)

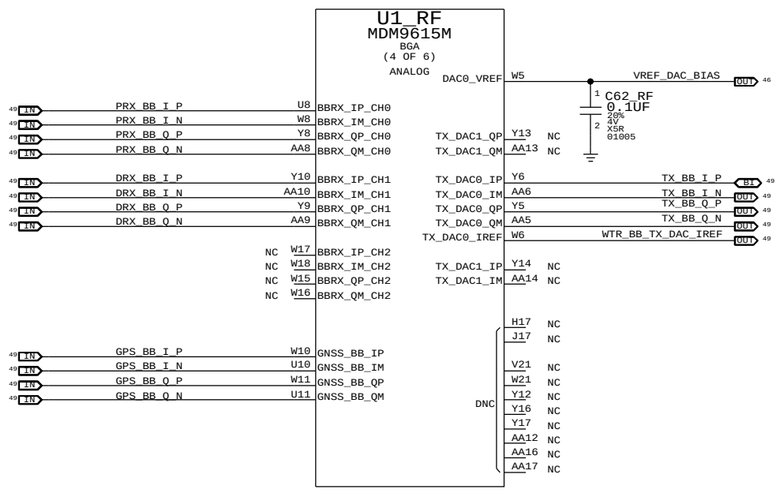

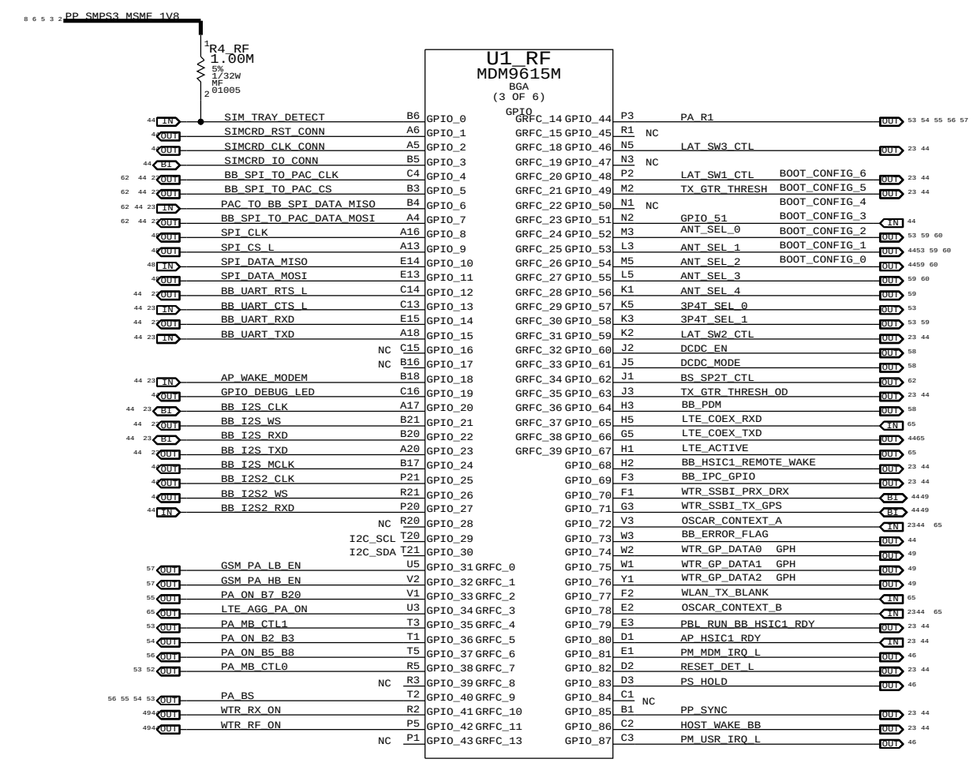

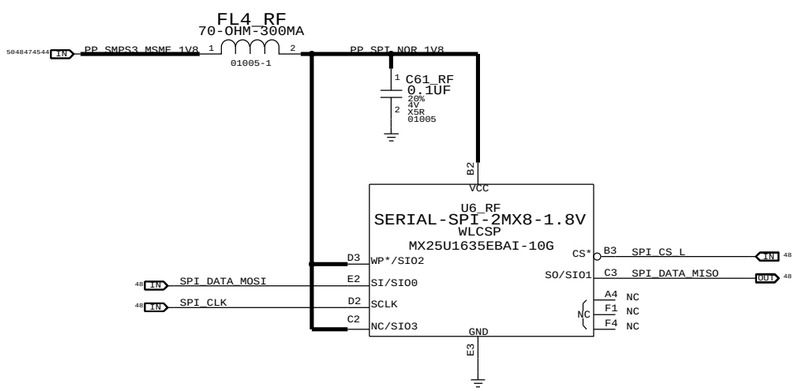

PAGE TITLE	BASEBAND (2 OF 2)
Apple Inc.	DRAWING NUMBER 051-9681 SIZE D
	REVISION 1.0.0
	BRANCH
	PAGE 6 OF 27
	SHEET 49 OF 70

NOTICE OF PROPRIETARY PROPERTY:
THE INFORMATION CONTAINED HEREIN IS THE PROPRIETARY PROPERTY OF APPLE INC.
THE POSESSOR AGREES TO THE FOLLOWING:
I TO MAINTAIN THIS DOCUMENT IN CONFIDENCE
II NOT TO REPRODUCE OR COPY IT
III NOT TO REVEAL OR PUBLISH IT IN WHOLE OR PART
IV ALL RIGHTS RESERVED

CONFIDENTIAL AND PROPRIETARY APPLE SYSTEM DESIGN. FOR REFERENCE PURPOSE ONLY - NOT A CHANGE REQUEST

RF TRANSCEIVER (1 OF 2)

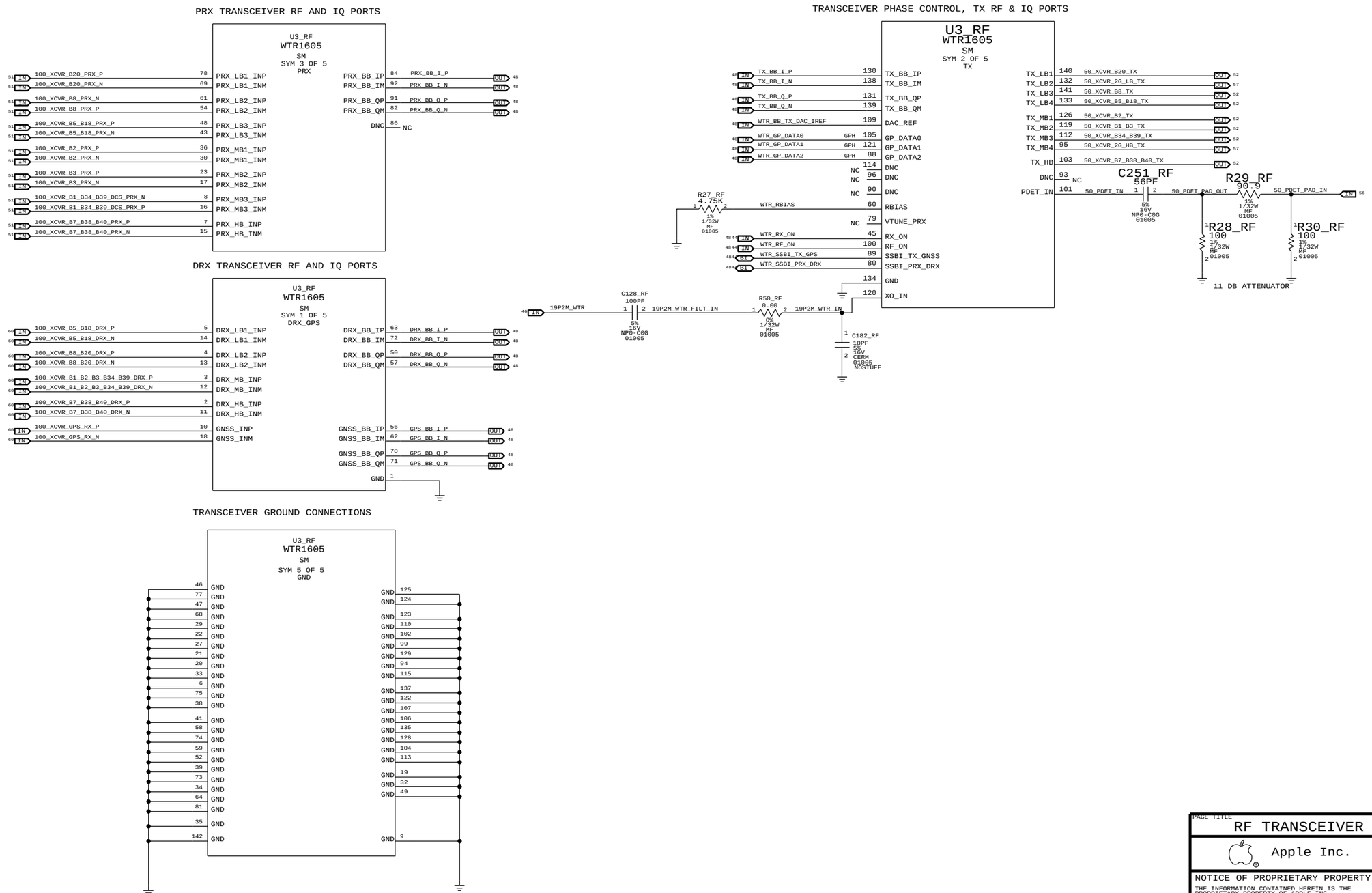

CONFIDENTIAL AND PROPRIETARY APPLE SYSTEM DESIGN. FOR REFERENCE PURPOSE ONLY - NOT A CHANGE REQUEST

PAGE TITLE	RF TRANSCEIVER (1 0F 2)
Apple Inc.	DRAWING NUMBER 051-9681 SIZE D
	REVISION 1.0.0
	BRANCH
	PAGE 7 OF 27
	SHEET 50 OF 70

NOTICE OF PROPRIETARY PROPERTY:
THE INFORMATION CONTAINED HEREIN IS THE PROPRIETARY PROPERTY OF APPLE INC.
THE POSESSOR AGREES TO THE FOLLOWING:
I TO MAINTAIN THIS DOCUMENT IN CONFIDENCE
II NOT TO REPRODUCE OR COPY IT
III NOT TO REVEAL OR PUBLISH IT IN WHOLE OR PART
IV ALL RIGHTS RESERVED

RF TRANSCEIVER (2 OF 2)

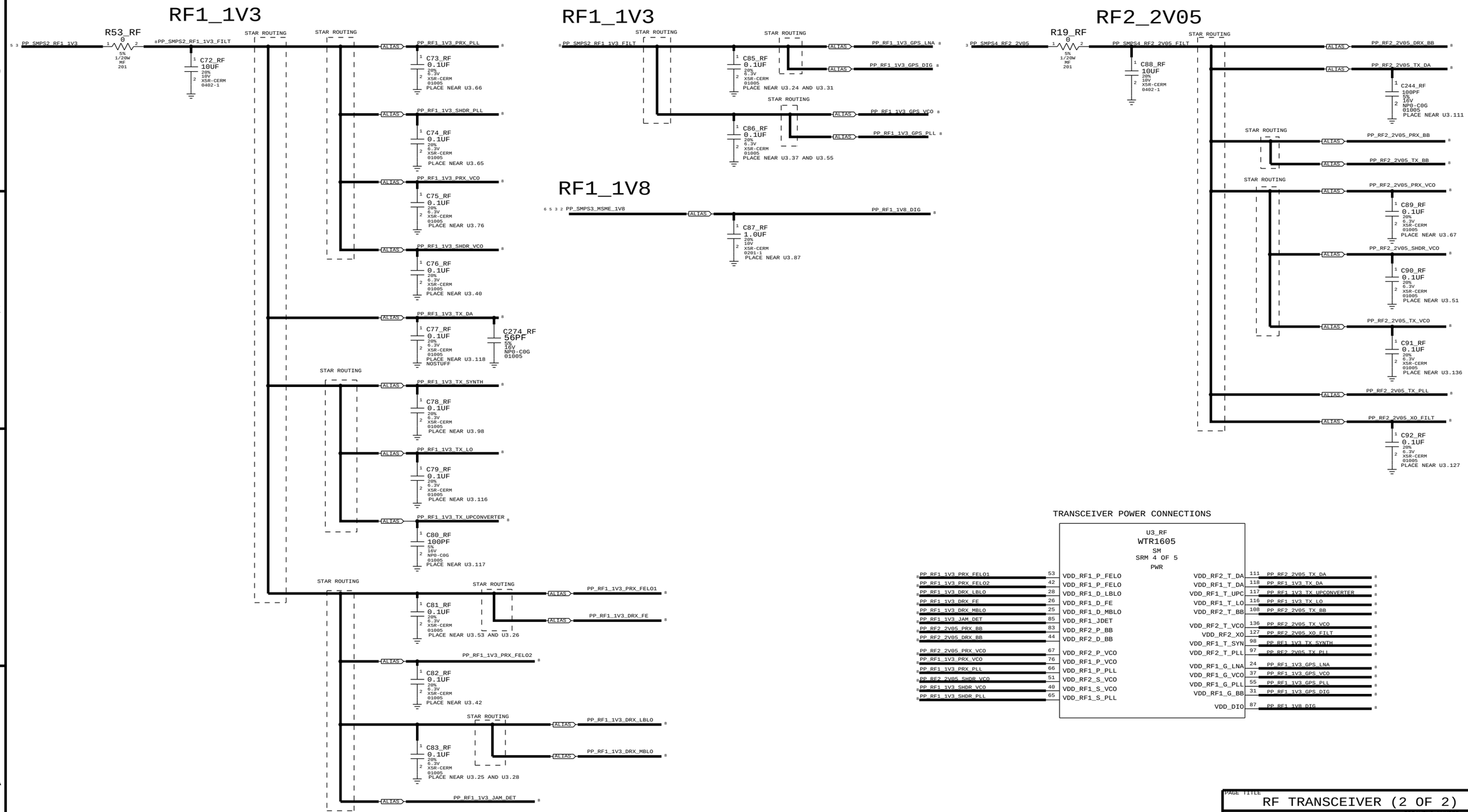

PAGE TITLE	RF TRANSCEIVER (2 OF 2)
	Apple Inc.
DRAWING NUMBER	051-9681
SIZE	D
REVISION	1.0.0
BRANCH	
PAGE	8 OF 27
SHEET	51 OF 70

NOTICE OF PROPRIETARY PROPERTY:
THE INFORMATION CONTAINED HEREIN IS THE PROPRIETARY PROPERTY OF APPLE INC.
THE POSESSOR AGREES TO THE FOLLOWING:
I TO MAINTAIN THIS DOCUMENT IN CONFIDENCE
II NOT TO REPRODUCE OR COPY IT
III NOT TO REVEAL OR PUBLISH IT IN WHOLE OR PART
IV ALL RIGHTS RESERVED

CONFIDENTIAL AND PROPRIETARY APPLE SYSTEM DESIGN. FOR REFERENCE PURPOSE ONLY - NOT A CHANGE REQUEST

RX MATCHING

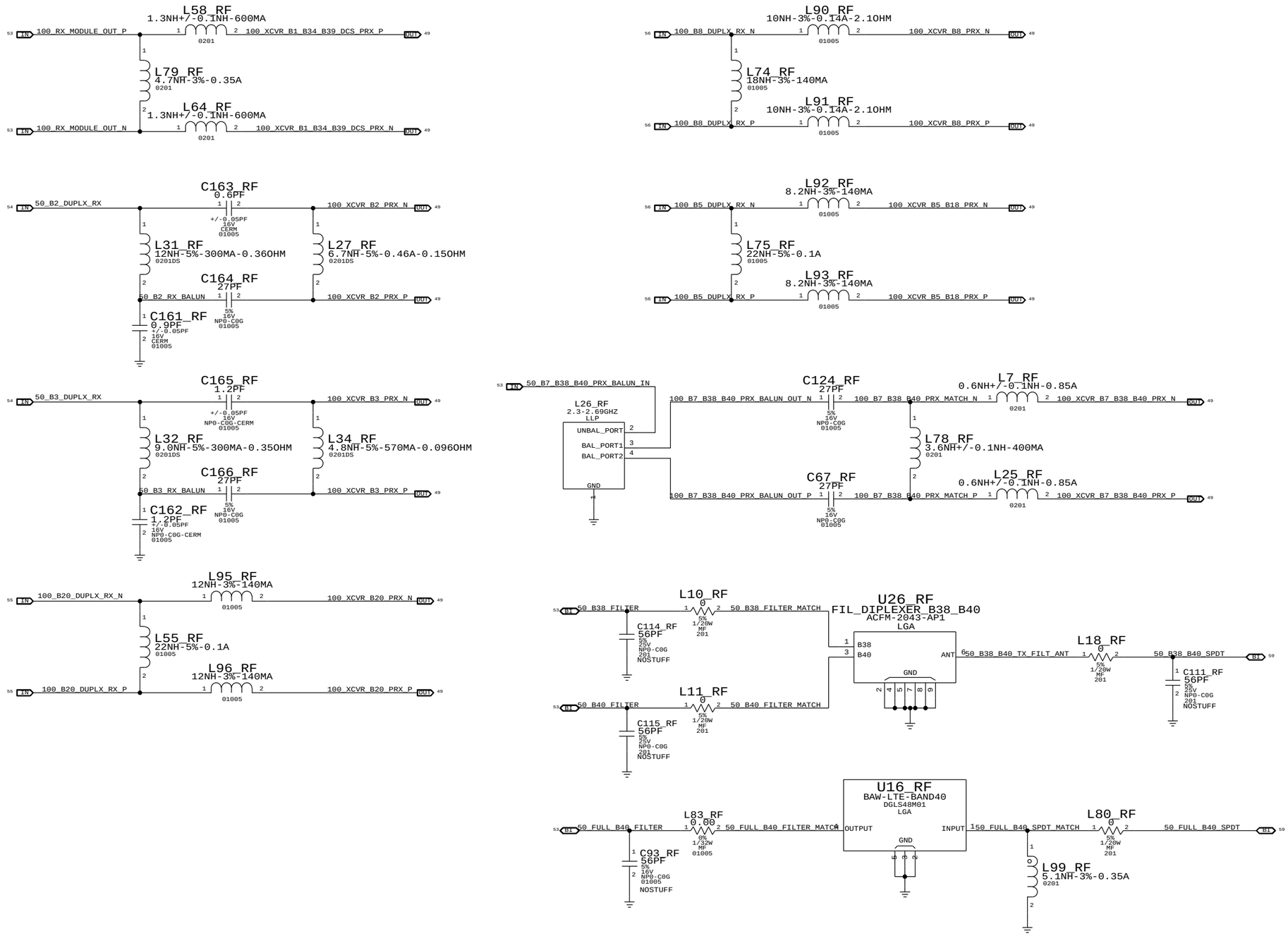
L58_RF
1.3NH+/-0.1NH-600MA
0201
100_RX_MODULE_OUT_P
100_XCVR_B1_B34_B39_DCS_PRX_P
L79_RF
4.7NH-3%-0.35A
0201
L64_RF
1.3NH+/-0.1NH-600MA
0201
100_RX_MODULE_OUT_N
100_XCVR_B1_B34_B39_DCS_PRX_N
L90_RF
10NH-3%-0.14A-2.1OHM
01005
100_B8_DUPLX_RX_N
100_XCVR_B8_PRX_N
L74_RF
18NH-3%-140MA
01005
L91_RF
10NH-3%-0.14A-2.1OHM
01005
100_B8_DUPLX_RX_P
100_XCVR_B8_PRX_P
C163_RF
0.6PF
+/-0.05PF
16V
CERM
01005
50_B2_DUPLX_RX
100_XCVR_B2_PRX_N
L31_RF
12NH-5%-300MA-0.36OHM
0201DS
L27_RF
6.7NH-5%-0.46A-0.15OHM
0201DS
C164_RF
27PF
5%
16V
NP0-C0G
01005
50_B2_RX_BALUN
100_XCVR_B2_PRX_P
C161_RF
0.9PF
+/-0.05PF
16V
CERM
01005
L92_RF
8.2NH-3%-140MA
01005
100_B5_DUPLX_RX_N
100_XCVR_B5_B18_PRX_N
L75_RF
22NH-5%-0.1A
01005
L93_RF
8.2NH-3%-140MA
01005
100_B5_DUPLX_RX_P
100_XCVR_B5_B18_PRX_P
C165_RF
1.2PF
+/-0.05PF
16V
NP0-C0G-CERM
01005
50_B3_DUPLX_RX
100_XCVR_B3_PRX_N
L32_RF
9.0NH-5%-300MA-0.35OHM
0201DS
L34_RF
4.8NH-5%-570MA-0.096OHM
0201DS
C166_RF
27PF
5%
16V
NP0-C0G
01005
50_B3_RX_BALUN
100_XCVR_B3_PRX_P
C162_RF
1.2PF
+/-0.05PF
16V
NP0-C0G-CERM
01005
50_B7_B38_B40_PRX_BALUN_IN
L26_RF
2.3-2.69GHZ
LLP
UNBAL_PORT
BAL_PORT1
BAL_PORT2
GND
C124_RF
27PF
5%
16V
NP0-C0G
01005
100_B7_B38_B40_PRX_BALUN_OUT_N
100_B7_B38_B40_PRX_MATCH_N
L7_RF
0.6NH+/-0.1NH-0.85A
0201
100_XCVR_B7_B38_B40_PRX_N
L78_RF
3.6NH+/-0.1NH-400MA
0201
C67_RF
27PF
5%
16V
NP0-C0G
01005
100_B7_B38_B40_PRX_BALUN_OUT_P
100_B7_B38_B40_PRX_MATCH_P
L25_RF
0.6NH+/-0.1NH-0.85A
0201
100_XCVR_B7_B38_B40_PRX_P
L95_RF
12NH-3%-140MA
01005
100_B20_DUPLX_RX_N
100_XCVR_B20_PRX_N
L55_RF
22NH-5%-0.1A
01005
L96_RF
12NH-3%-140MA
01005
100_B20_DUPLX_RX_P
100_XCVR_B20_PRX_P
L10_RF
0
5%
1/20W
MF
201
50_B38_FILTER
50_B38_FILTER_MATCH
C114_RF
56PF
5%
25V
NP0-C0G
201
NOSTUFF
U26_RF
FIL_DIPLEXER_B38_B40
ACFM-2043-AP1
LGA
B38
B40
ANT
GND
50_B38_B40_TX_FILT_ANT
L18_RF
0
5%
1/20W
MF
201
50_B38_B40_SPDT
C111_RF
56PF
5%
25V
NP0-C0G
201
NOSTUFF
L11_RF
0
5%
1/20W
MF
201
50_B40_FILTER
50_B40_FILTER_MATCH
C115_RF
56PF
5%
25V
NP0-C0G
201
NOSTUFF
U16_RF
BAW-LTE-BAND40
DGLS48M01
LGA
OUTPUT
INPUT
GND
L83_RF
0.00
0%
1/32W
MF
01005
50_FULL_B40_FILTER
50_FULL_B40_FILTER_MATCH
C93_RF
56PF
5%
16V
NP0-C0G
01005
NOSTUFF
50_FULL_B40_SPDT_MATCH
L80_RF
0
5%
1/20W
MF
201
50_FULL_B40_SPDT
L99_RF
5.1NH-3%-0.35A
0201

TX INTERSTAGE FILTERS

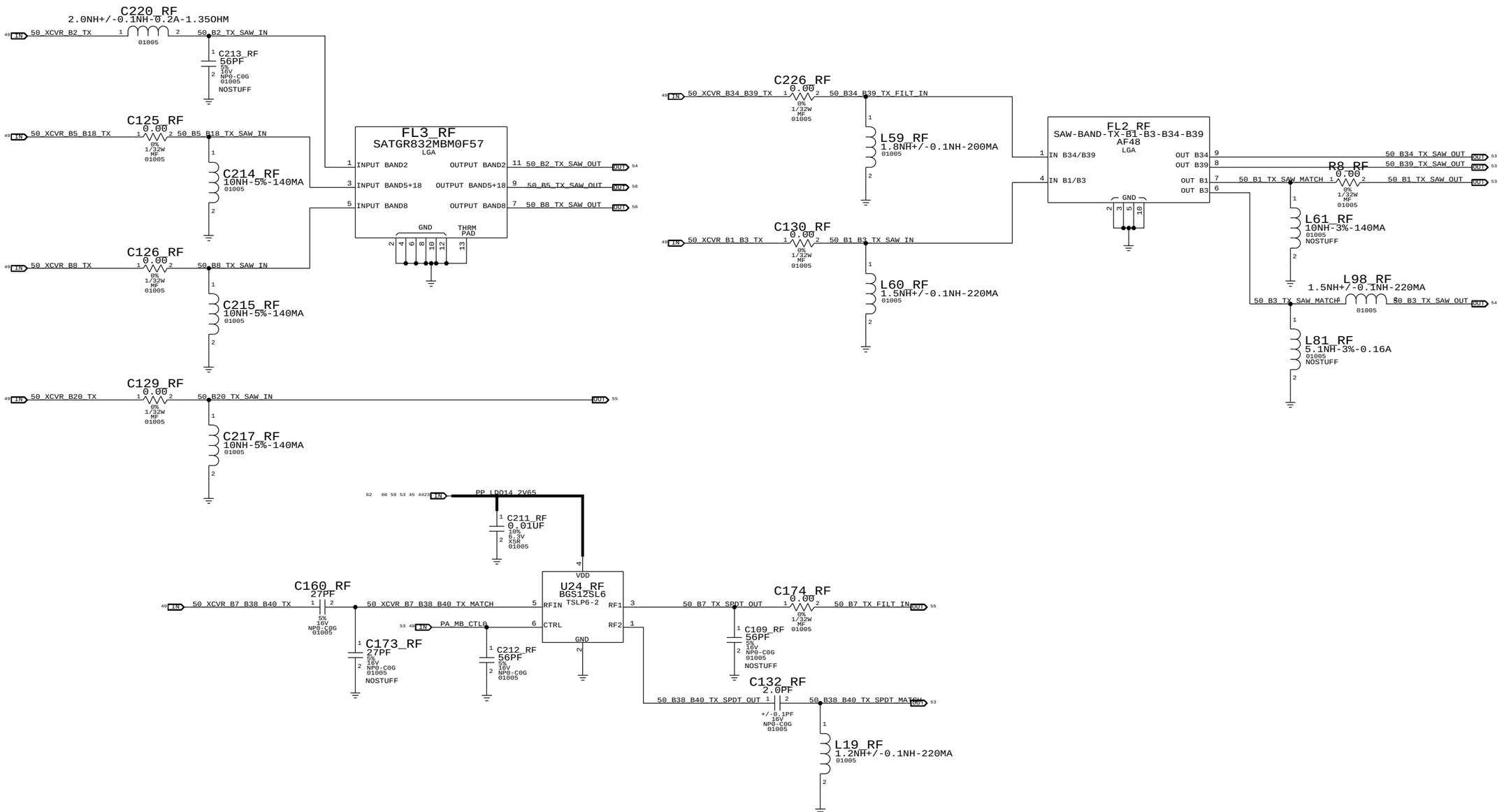

CONFIDENTIAL AND PROPRIETARY APPLE SYSTEM DESIGN. FOR REFERENCE PURPOSE ONLY - NOT A CHANGE REQUEST

PAGE TITLE
RF TRANSCEIVER (3 OF 4)

Apple Inc.

DRAWING NUMBER 051-9681 SIZE D

REVISION 1.0.0

BRANCH

PAGE 10 OF 27

SHEET 53 OF 70

NOTICE OF PROPRIETARY PROPERTY:
THE INFORMATION CONTAINED HEREIN IS THE PROPRIETARY PROPERTY OF APPLE INC.
THE POSESSOR AGREES TO THE FOLLOWING:
I TO MAINTAIN THIS DOCUMENT IN CONFIDENCE
II NOT TO REPRODUCE OR COPY IT
III NOT TO REVEAL OR PUBLISH IT IN WHOLE OR PART
IV ALL RIGHTS RESERVED

BAND 1/34/39/38/40 TX

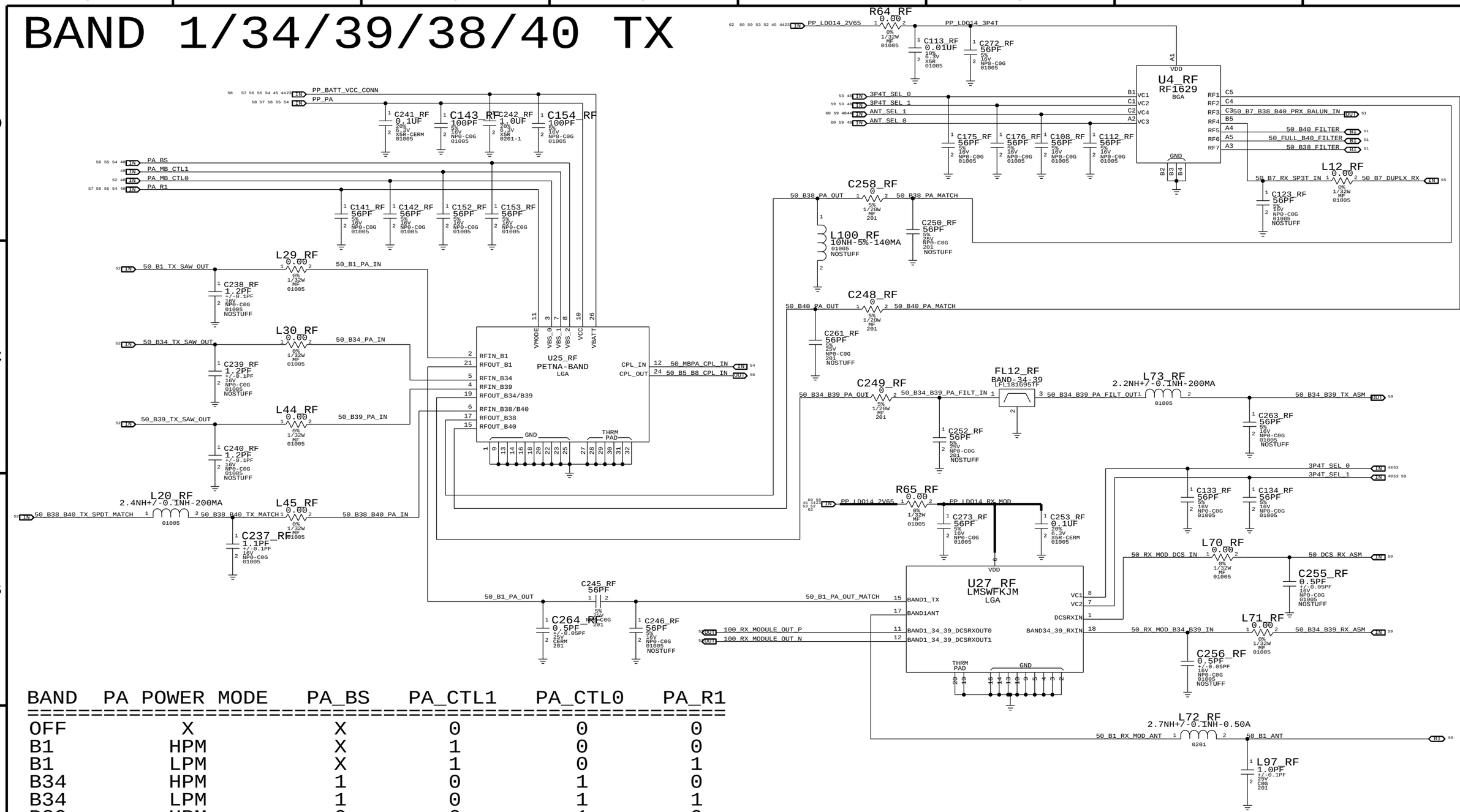

BAND	PA POWER MODE	PA_BS	PA_CTL1	PA_CTL0	PA_R1
OFF	X	X	0	0	0
B1	HPM	X	1	0	0
B1	LPM	X	1	0	1
B34	HPM	1	0	1	0
B34	LPM	1	0	1	1
B39	HPM	0	0	1	0
B39	LPM	0	0	1	1
B38	HPM	1	1	1	0
B38	LPM	1	1	1	1
B40	HPM	0	1	1	0
B40	LPM	0	1	1	1

PAGE TITLE: PENTABAND PA

Apple Inc.

DRAWING NUMBER: 051-9681 SIZE: D

REVISION: 1.0.0

BRANCH:

PAGE: 11 OF 27

SHEET: 54 OF 70

NOTICE OF PROPRIETARY PROPERTY:
THE INFORMATION CONTAINED HEREIN IS THE PROPRIETARY PROPERTY OF APPLE INC.
THE POSESSOR AGREES TO THE FOLLOWING:
I TO MAINTAIN THIS DOCUMENT IN CONFIDENCE
II NOT TO REPRODUCE OR COPY IT
III NOT TO REVEAL OR PUBLISH IT IN WHOLE OR PART
IV ALL RIGHTS RESERVED

BAND 2/3 PAD

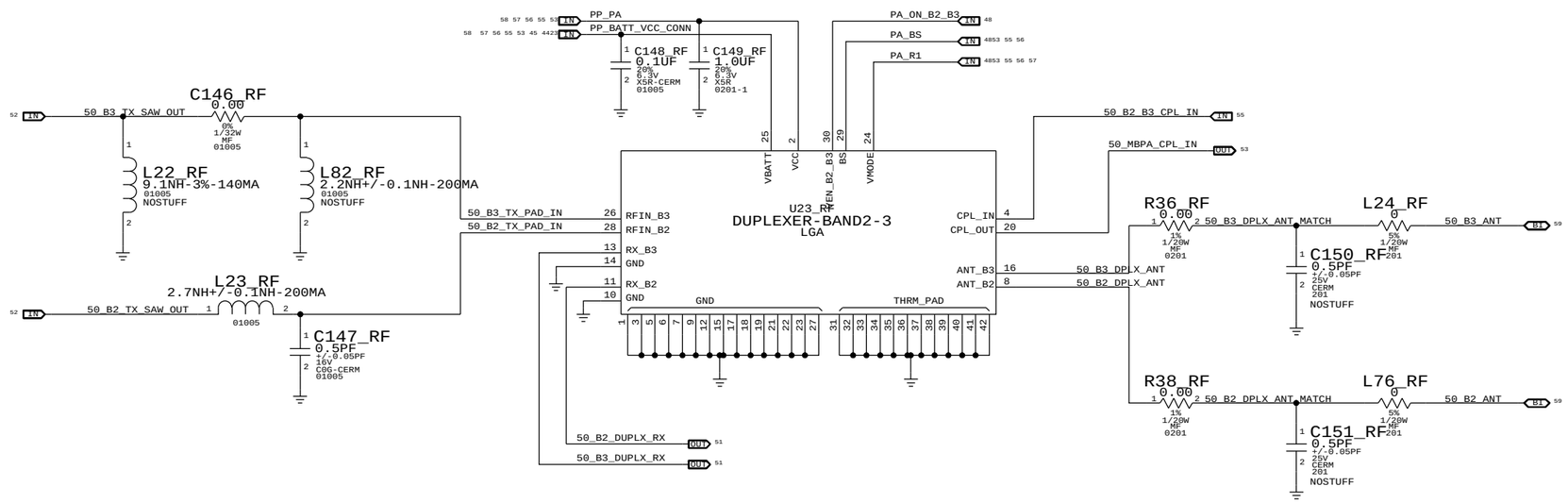

BAND	PA POWER MODE	PA_BS	PA_ON_B2_B3	PA_R1
OFF	X	X	0	X
B3	HPM	0	1	0
B3	LPM	0	1	1
B2	HPM	1	1	0
B2	LPM	1	1	1

PAGE TITLE: BAND 2/3 PAD

Apple Inc.

DRAWING NUMBER: 051-9681 SIZE: D

REVISION: 1.0.0

BRANCH:

PAGE: 12 OF 27

SHEET: 55 OF 70

NOTICE OF PROPRIETARY PROPERTY:
THE INFORMATION CONTAINED HEREIN IS THE PROPRIETARY PROPERTY OF APPLE INC.
THE POSESSOR AGREES TO THE FOLLOWING:
I TO MAINTAIN THIS DOCUMENT IN CONFIDENCE
II NOT TO REPRODUCE OR COPY IT
III NOT TO REVEAL OR PUBLISH IT IN WHOLE OR PART
IV ALL RIGHTS RESERVED

BAND 20/7 PAD

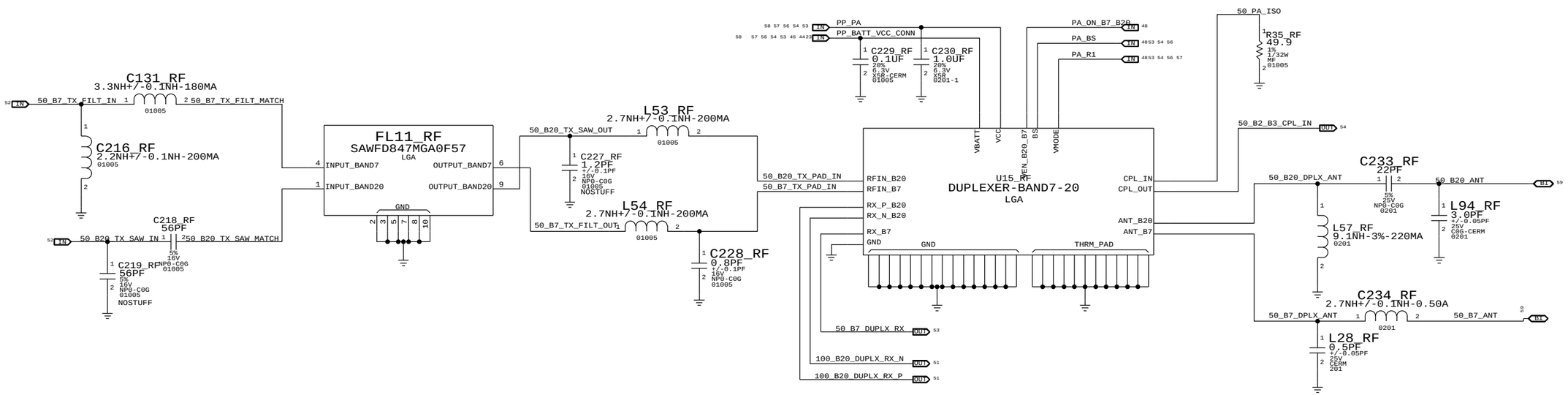

BAND	PA POWER MODE	PA_BS	PA_ON_B20_B7	PA_R1
OFF	X	X	0	X
B20	HPM	0	1	0
B20	LPM	0	1	1
B7	HPM	1	1	0
B7	LPM	1	1	1

PAGE TITLE: BAND 7/20 PAD

Apple Inc.

DRAWING NUMBER: 051-9681 SIZE: D

REVISION: 1.0.0

BRANCH:

PAGE: 13 OF 27

SHEET: 56 OF 70

NOTICE OF PROPRIETARY PROPERTY:
THE INFORMATION CONTAINED HEREIN IS THE PROPRIETARY PROPERTY OF APPLE INC.
THE POSESSOR AGREES TO THE FOLLOWING:
I TO MAINTAIN THIS DOCUMENT IN CONFIDENCE
II NOT TO REPRODUCE OR COPY IT
III NOT TO REVEAL OR PUBLISH IT IN WHOLE OR PART
IV ALL RIGHTS RESERVED

BAND 5/8 PAD

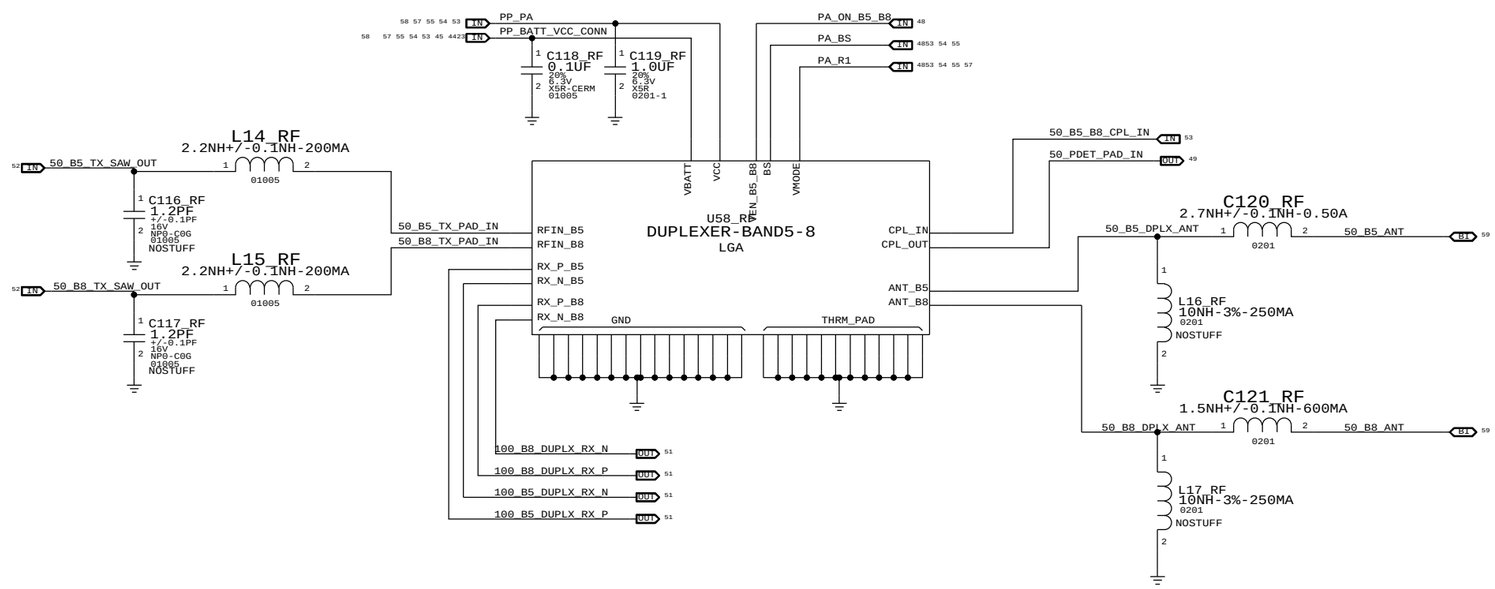

BAND	PA POWER MODE	PA_BS	PA_ON_B5_B8	PA_R1
OFF	X	X	0	X
B5	HPM	0	1	0
B5	LPM	0	1	1
B8	HPM	1	1	0
B8	LPM	1	1	1

PAGE TITLE: BAND 5/8 PAD

Apple Inc.

DRAWING NUMBER: 051-9681 SIZE: D

REVISION: 1.0.0

BRANCH:

PAGE: 14 OF 27

SHEET: 57 OF 70

NOTICE OF PROPRIETARY PROPERTY:
THE INFORMATION CONTAINED HEREIN IS THE PROPRIETARY PROPERTY OF APPLE INC.
THE POSESSOR AGREES TO THE FOLLOWING:
I TO MAINTAIN THIS DOCUMENT IN CONFIDENCE
II NOT TO REPRODUCE OR COPY IT
III NOT TO REVEAL OR PUBLISH IT IN WHOLE OR PART
IV ALL RIGHTS RESERVED

2G PA

CONFIDENTIAL AND PROPRIETARY APPLE SYSTEM DESIGN. FOR REFERENCE PURPOSES ONLY - NOT A CHANGE REQUEST.

2G PA GAIN MODES

BAND	MODE	GAIN MODE	PA_R1	PCL RANGE
LOW BAND	GSM	ULTRA LOW	HIGH	16 TO 19
LOW BAND	GSM	LOW	HIGH	14 TO 15
LOW BAND	GSM	MEDIUM	LOW	7 TO 13
LOW BAND	GSM	HIGH	LOW	5 TO 6
HIGH BAND	GSM	ULTRA LOW	HIGH	10 TO 15
HIGH BAND	GSM	LOW	HIGH	7 TO 9
HIGH BAND	GSM	HIGH	LOW	0 TO 6
LOW BAND	EDGE	LOW	HIGH	15 TO 19
LOW BAND	EDGE	MEDIUM	LOW	10 TO 14
LOW BAND	EDGE	HIGH	LOW	8 TO 9
HIGH BAND	EDGE	LOW	HIGH	9 TO 15
HIGH BAND	EDGE	HIGH	LOW	2 TO 8

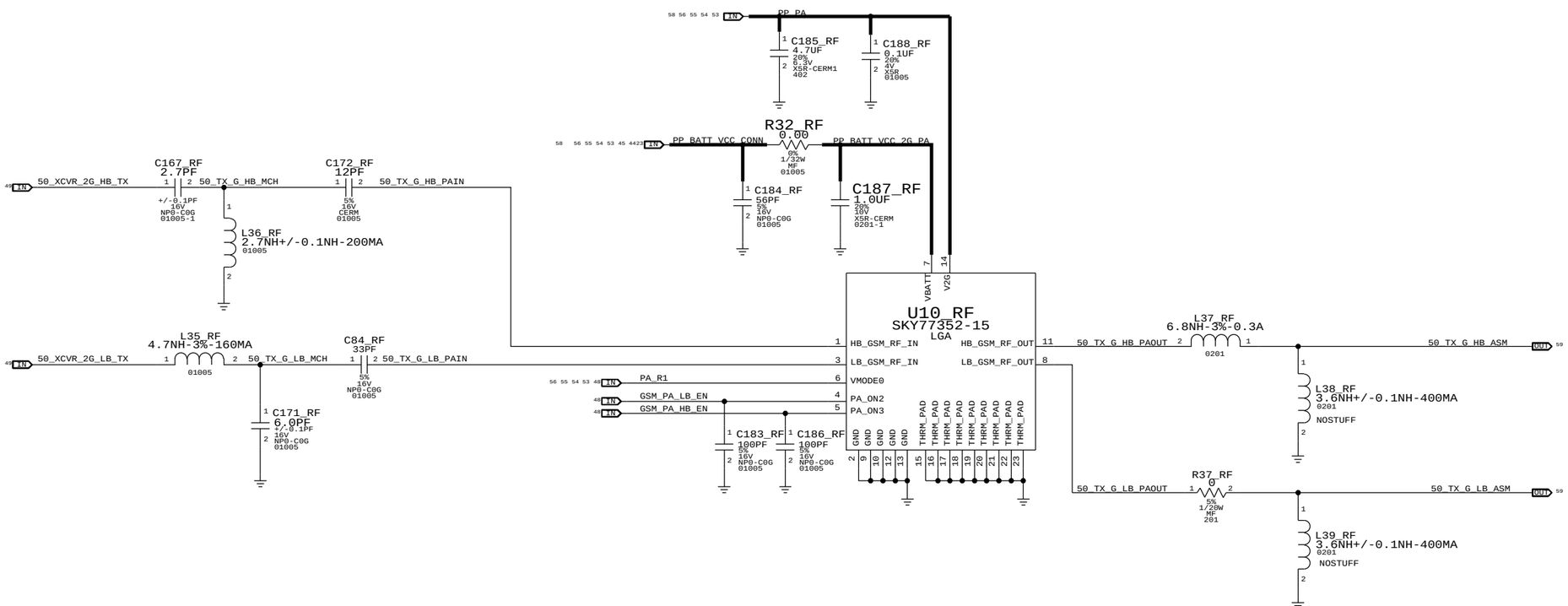

PAGE TITLE	2G PA
Apple Inc.	DRAWING NUMBER 051-9681 SIZE D
	REVISION 1.0.0
	BRANCH
	PAGE 15 OF 27
	SHEET 58 OF 70

NOTICE OF PROPRIETARY PROPERTY:
THE INFORMATION CONTAINED HEREIN IS THE PROPRIETARY PROPERTY OF APPLE INC.
THE POSESSOR AGREES TO THE FOLLOWING:
I TO MAINTAIN THIS DOCUMENT IN CONFIDENCE
II NOT TO REPRODUCE OR COPY IT
III NOT TO REVEAL OR PUBLISH IT IN WHOLE OR PART
IV ALL RIGHTS RESERVED

PA DC/DC CONVERTER

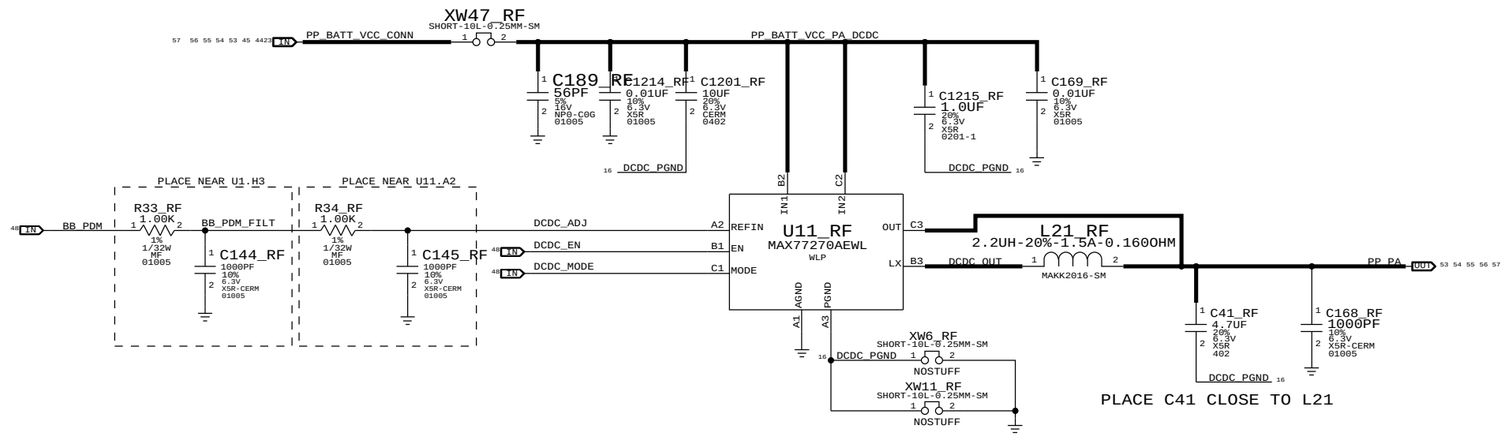

CONFIDENTIAL AND PROPRIETARY APPLE SYSTEM DESIGN. FOR REFERENCE PURPOSE ONLY - NOT A CHANGE REQUEST

PAGE TITLE: PA DCDC CONVERTER

Apple Inc.

DRAWING NUMBER: 051-9681 SIZE: D

REVISION: 1.0.0

BRANCH:

PAGE: 16 OF 27

SHEET: 59 OF 70

NOTICE OF PROPRIETARY PROPERTY:
THE INFORMATION CONTAINED HEREIN IS THE PROPRIETARY PROPERTY OF APPLE INC.
THE POSESSOR AGREES TO THE FOLLOWING:
I TO MAINTAIN THIS DOCUMENT IN CONFIDENCE
II NOT TO REPRODUCE OR COPY IT
III NOT TO REVEAL OR PUBLISH IT IN WHOLE OR PART
IV ALL RIGHTS RESERVED

PRIMARY ASM

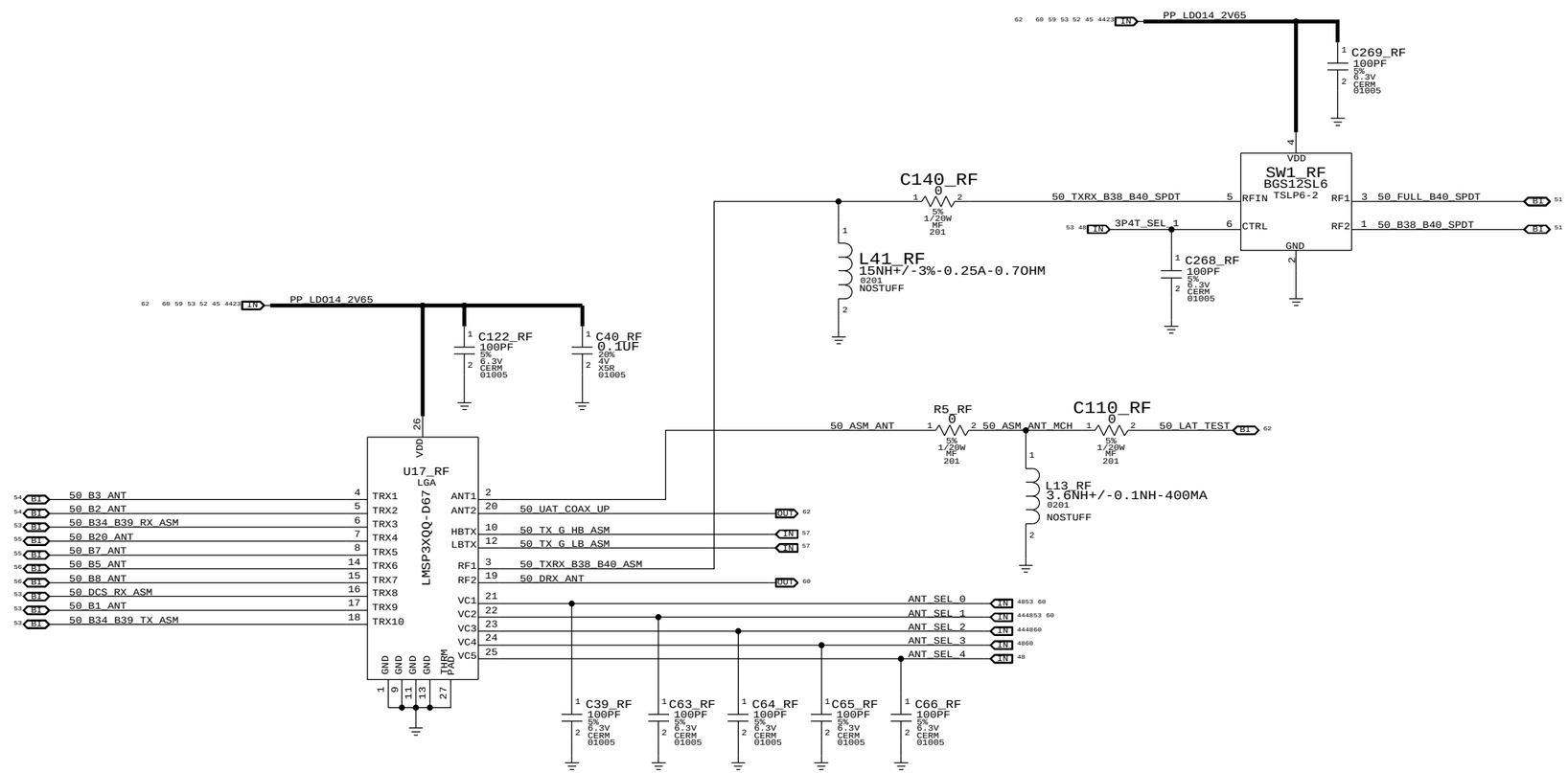

CONFIDENTIAL AND PROPRIETARY APPLE SYSTEM DESIGN. FOR REFERENCE PURPOSE ONLY - NOT A CHANGE REQUEST

PAGE TITLE
ASM AND HB LTE FRONT-END

Apple Inc.

DRAWING NUMBER 051-9681 SIZE D

REVISION 1.0.0

BRANCH

PAGE 17 OF 27

SHEET 60 OF 70

NOTICE OF PROPRIETARY PROPERTY:
THE INFORMATION CONTAINED HEREIN IS THE PROPRIETARY PROPERTY OF APPLE INC.
THE POSESSOR AGREES TO THE FOLLOWING:
I TO MAINTAIN THIS DOCUMENT IN CONFIDENCE
II NOT TO REPRODUCE OR COPY IT
III NOT TO REVEAL OR PUBLISH IT IN WHOLE OR PART
IV ALL RIGHTS RESERVED

RX DIVERSITY

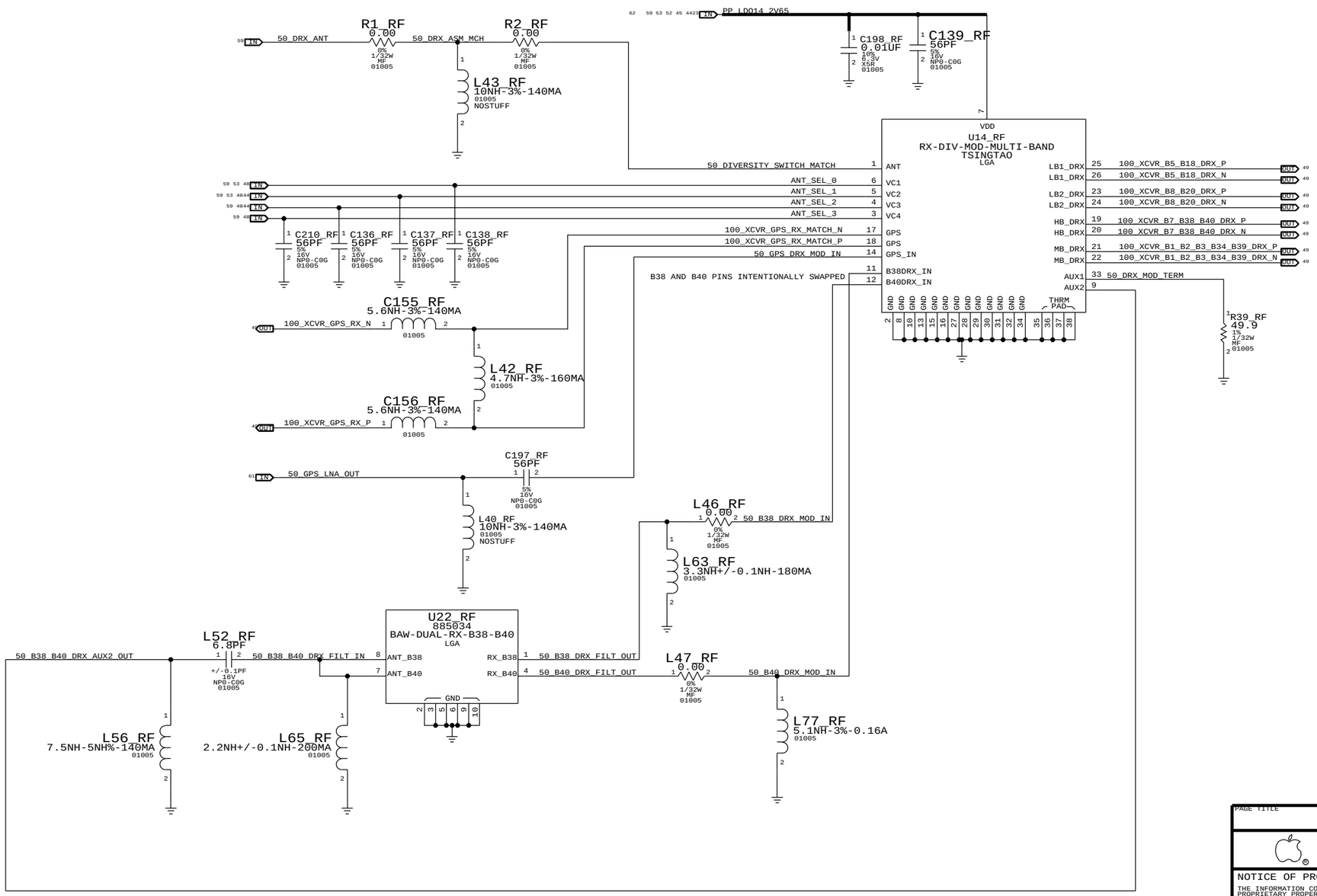

PAGE TITLE	RX DIVERSITY
Apple Inc.	DRAWING NUMBER 051-9681 SIZE D
	REVISION 1.0.0
NOTICE OF PROPRIETARY PROPERTY:	BRANCH
THE INFORMATION CONTAINED HEREIN IS THE PROPRIETARY PROPERTY OF APPLE INC. THE POSESSOR AGREES TO THE FOLLOWING: I TO MAINTAIN THIS DOCUMENT IN CONFIDENCE II NOT TO REPRODUCE OR COPY IT III NOT TO REVEAL OR PUBLISH IT IN WHOLE OR PART IV ALL RIGHTS RESERVED	PAGE 18 OF 27
	SHEET 61 OF 70

CONFIDENTIAL AND PROPRIETARY APPLE SYSTEM DESIGN. FOR REFERENCE PURPOSE ONLY - NOT A CHANGE REQUEST

GPS

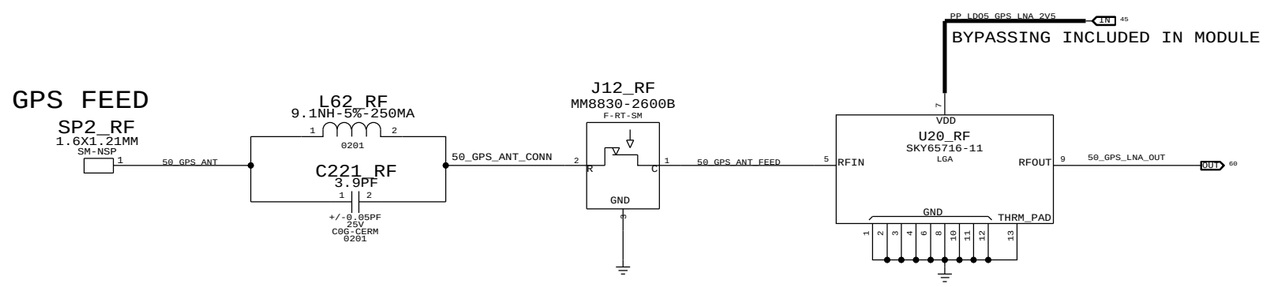

PAGE TITLE	GPS
Apple Inc.	DRAWING NUMBER 051-9681 SIZE D
	REVISION 1.0.0
	BRANCH
	PAGE 19 OF 27
	SHEET 62 OF 70

NOTICE OF PROPRIETARY PROPERTY:
THE INFORMATION CONTAINED HEREIN IS THE PROPRIETARY PROPERTY OF APPLE INC.
THE POSESSOR AGREES TO THE FOLLOWING:
I TO MAINTAIN THIS DOCUMENT IN CONFIDENCE
II NOT TO REPRODUCE OR COPY IT
III NOT TO REVEAL OR PUBLISH IT IN WHOLE OR PART
IV ALL RIGHTS RESERVED

ANTENNA FEEDS

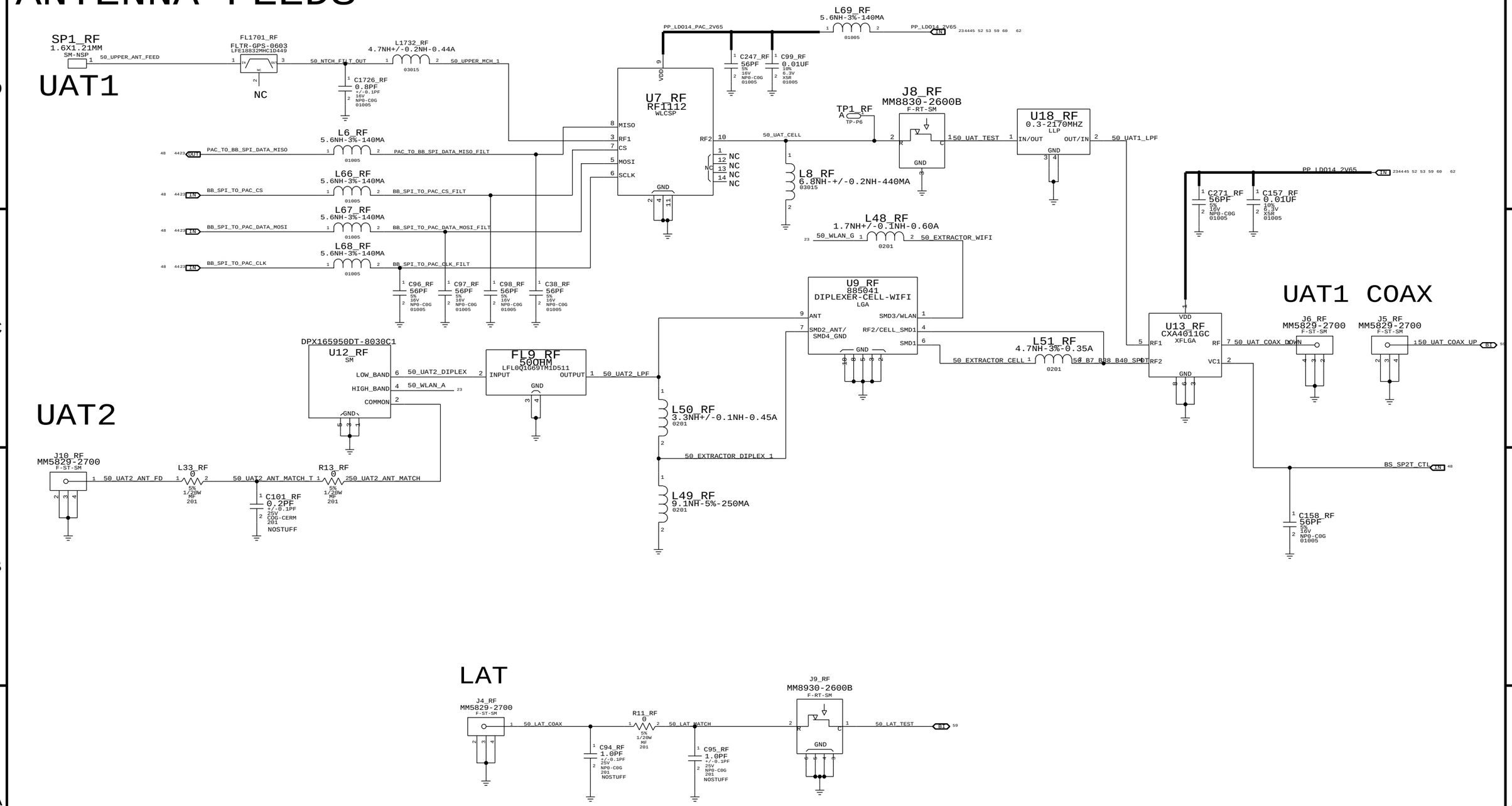

CONFIDENTIAL AND PROPRIETARY APPLE SYSTEM DESIGN. FOR REFERENCE PURPOSE ONLY - NOT A CHANGE REQUEST

PAGE TITLE	ANTENNA FEEDS
Apple Inc.	DRAWING NUMBER 051-9681 SIZE D
	REVISION 1.0.0
NOTICE OF PROPRIETARY PROPERTY: THE INFORMATION CONTAINED HEREIN IS THE PROPRIETARY PROPERTY OF APPLE INC. THE POSESSOR AGREES TO THE FOLLOWING: I TO MAINTAIN THIS DOCUMENT IN CONFIDENCE II NOT TO REPRODUCE OR COPY IT III NOT TO REVEAL OR PUBLISH IT IN WHOLE OR PART IV ALL RIGHTS RESERVED	BRANCH
	PAGE 20 OF 27
	SHEET 63 OF 70

ANTENNA FEEDS (2 OF 2)

PAGE TITLE
ANTENNA FEEDS

Apple Inc.

DRAWING NUMBER 051-9681 SIZE D
REVISION 1.0.0
BRANCH
PAGE 21 OF 27
SHEET 64 OF 70

NOTICE OF PROPRIETARY PROPERTY:
THE INFORMATION CONTAINED HEREIN IS THE PROPRIETARY PROPERTY OF APPLE INC.
THE POSESSOR AGREES TO THE FOLLOWING:
I TO MAINTAIN THIS DOCUMENT IN CONFIDENCE
II NOT TO REPRODUCE OR COPY IT
III NOT TO REVEAL OR PUBLISH IT IN WHOLE OR PART
IV ALL RIGHTS RESERVED

FRONT END LOGIC TABLE

BAND	ANT_SEL_0	ANT_SEL_1	ANT_SEL_2	ANT_SEL_3	ANT_SEL_4	PRX PATH	DRX PATH
GSM LB TX	LOW	HIGH	LOW	LOW	LOW	LAT	TERMINATED
GSM LB TX	LOW	HIGH	LOW	LOW	HIGH	UAT	TERMINATED
GSM HB TX	HIGH	HIGH	LOW	HIGH	LOW	LAT	TERMINATED
GSM HB TX	HIGH	HIGH	LOW	HIGH	HIGH	UAT	TERMINATED
B1	HIGH	HIGH	HIGH	HIGH	LOW	LAT	UAT
B1	HIGH	HIGH	HIGH	HIGH	HIGH	UAT	LAT
B2/B25, 1900RX	HIGH	LOW	LOW	HIGH	LOW	LAT	UAT
B2/B25, 1900RX	HIGH	LOW	LOW	HIGH	HIGH	UAT	LAT
B3	HIGH	HIGH	LOW	LOW	LOW	LAT	UAT
B3	HIGH	HIGH	LOW	LOW	HIGH	UAT	LAT
B5/B6/B18, 850RX	HIGH	LOW	LOW	LOW	LOW	LAT	UAT
B5/B6/B18, 850RX	HIGH	LOW	LOW	LOW	HIGH	UAT	LAT
B20	HIGH	LOW	HIGH	HIGH	LOW	LAT	UAT
B20	HIGH	LOW	HIGH	HIGH	HIGH	UAT	LAT
B34/B39 TX	LOW	LOW	HIGH	HIGH	LOW	LAT	TERMINATED
B34/B39 TX	LOW	LOW	HIGH	HIGH	HIGH	UAT	TERMINATED
B34 RX	LOW	LOW	LOW	HIGH	LOW	LAT	UAT
B34 RX	LOW	LOW	LOW	HIGH	HIGH	UAT	LAT
B39 RX	LOW	LOW	HIGH	LOW	LOW	LAT	UAT
B39 RX	LOW	LOW	HIGH	LOW	HIGH	UAT	LAT
B38/B40 TX	LOW	HIGH	HIGH	LOW	LOW	LAT	TERMINATED
B38/B40 TX	LOW	HIGH	HIGH	LOW	HIGH	UAT	TERMINATED
B38 RX	HIGH	LOW	HIGH	LOW	LOW	LAT	UAT
B38 RX	HIGH	LOW	HIGH	LOW	HIGH	UAT	LAT
B40 RX	HIGH	HIGH	HIGH	LOW	LOW	LAT	UAT
B40 RX	HIGH	HIGH	HIGH	LOW	HIGH	UAT	LAT
B7	LOW	HIGH	HIGH	HIGH	LOW	LAT	UAT
B7	LOW	HIGH	HIGH	HIGH	HIGH	UAT	LAT
B8, GSM900 RX	LOW	HIGH	LOW	HIGH	LOW	LAT	UAT
B8, GSM900 RX	LOW	HIGH	LOW	HIGH	HIGH	UAT	LAT
GSM1800 RX	LOW	LOW	LOW	LOW	LOW	LAT	TERMINATED
GSM1800 RX	LOW	LOW	LOW	LOW	HIGH	UAT	TERMINATED

LAT = LOWER ANTENNA
UAT = UPPER ANTENNA

PAGE TITLE: FRONT END LOGIC TABLE

Apple Inc.

DRAWING NUMBER: 051-9681 SIZE: D
REVISION: 1.0.0
BRANCH:
PAGE: 22 OF 27
SHEET: 65 OF 70

NOTICE OF PROPRIETARY PROPERTY:
THE INFORMATION CONTAINED HEREIN IS THE PROPRIETARY PROPERTY OF APPLE INC.
THE POSESSOR AGREES TO THE FOLLOWING:
I TO MAINTAIN THIS DOCUMENT IN CONFIDENCE
II NOT TO REPRODUCE OR COPY IT
III NOT TO REVEAL OR PUBLISH IT IN WHOLE OR PART
IV ALL RIGHTS RESERVED

WLAN/BT

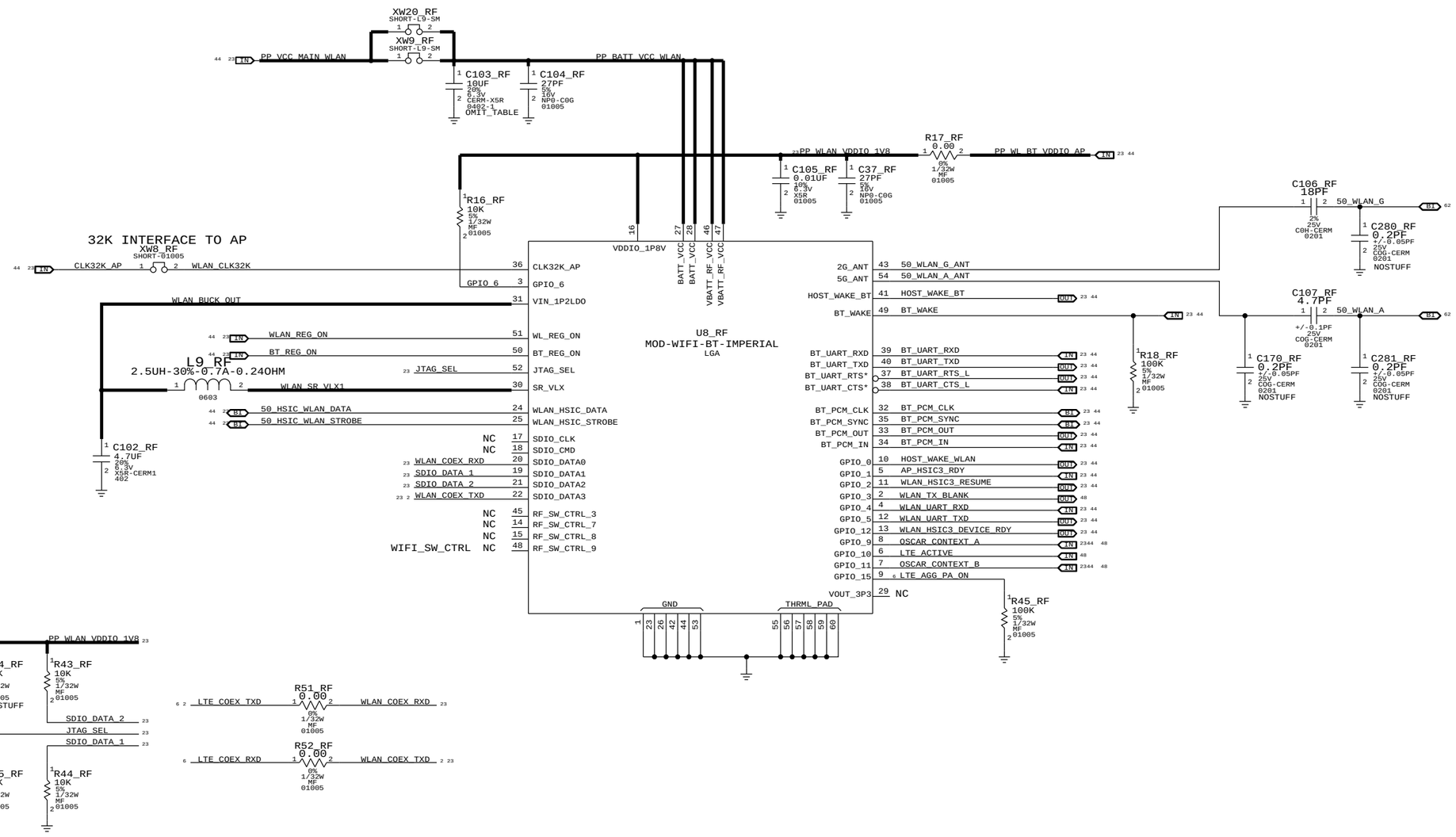

PULL-UP ON GPIO6, SDIO_DATA_2 & PULL-DOWN ON SDIO_DATA_1 REQUIRED FOR HSIC BOOTSTRAPPING

PAGE TITLE	WIFI/BT
	Apple Inc.
DRAWING NUMBER	051-9681
SIZE	D
REVISION	1.0.0
BRANCH	
PAGE	23 OF 27
SHEET	66 OF 70

NOTICE OF PROPRIETARY PROPERTY:
THE INFORMATION CONTAINED HEREIN IS THE PROPRIETARY PROPERTY OF APPLE INC.
THE POSESSOR AGREES TO THE FOLLOWING:
I TO MAINTAIN THIS DOCUMENT IN CONFIDENCE
II NOT TO REPRODUCE OR COPY IT
III NOT TO REVEAL OR PUBLISH IT IN WHOLE OR PART
IV ALL RIGHTS RESERVED

CONFIDENTIAL AND PROPRIETARY APPLE SYSTEM DESIGN. FOR REFERENCE PURPOSE ONLY - NOT A CHANGE REQUEST

Title: Basenet Report
Design: radio_mlb
Date: Sep 5 9:13:14 2012

Base nets and synonyms for
radio_mlb_lib.RADIO_MLB(@radio_mlb_lib.radio_mlb(sch_1))

Base Signal	Synonyms	Location([Zone][dir])
3P4T_SEL_0	3P4T_SEL_0 - @radio_mlb_lib.RADIO_MLB	6C2 11C1 11D4
3P4T_SEL_1	3P4T_SEL_1 - @radio_mlb_lib.RADIO_MLB	6C2 11B1 11D4 17C3
19P2M_CLK_EN	19P2M_CLK_EN - @radio_mlb_lib.RADIO_MLB	4B2 5A5
19P2M_MDM	19P2M_MDM - @radio_mlb_lib.RADIO_MLB	4B2 5A5
19P2M_WTR	19P2M_WTR - @radio_mlb_lib.RADIO_MLB	4B2 7C5
19P2M_WTR_FILT_IN	19P2M_WTR_FILT_IN - @radio_mlb_lib.RADIO_MLB	7C5
19P2M_WTR_IN	19P2M_WTR_IN - @radio_mlb_lib.RADIO_MLB	7C4
19P2M_XTAL_IN	19P2M_XTAL_IN - @radio_mlb_lib.RADIO_MLB	4B4
19P2M_XTAL_OUT	19P2M_XTAL_OUT - @radio_mlb_lib.RADIO_MLB	4B4
50_ASM_ANT	50_ASM_ANT - @radio_mlb_lib.RADIO_MLB	17B4
50_ASM_ANT_MCH	50_ASM_ANT_MCH - @radio_mlb_lib.RADIO_MLB	17B4
50_B1_ANT	50_B1_ANT - @radio_mlb_lib.RADIO_MLB	11A1 17B7
50_B1_B3_TX_SAW_IN	50_B1_B3_TX_SAW_IN - @radio_mlb_lib.RADIO_MLB	10C4
50_B1_PA_IN	50_B1_PA_IN - @radio_mlb_lib.RADIO_MLB	11C7
50_B1_PA_OUT	50_B1_PA_OUT - @radio_mlb_lib.RADIO_MLB	11B6
50_B1_PA_OUT_MATCH	50_B1_PA_OUT_MATCH - @radio_mlb_lib.RADIO_MLB	11B4
50_B1_RX_MOD_ANT	50_B1_RX_MOD_ANT - @radio_mlb_lib.RADIO_MLB	11A3
50_B1_TX_SAW_MATCH	50_B1_TX_SAW_MATCH - @radio_mlb_lib.RADIO_MLB	10D2
50_B1_TX_SAW_OUT	50_B1_TX_SAW_OUT - @radio_mlb_lib.RADIO_MLB	10D1 11C8
50_B2_ANT	50_B2_ANT - @radio_mlb_lib.RADIO_MLB	12C2 17B7
50_B2_B3_CPL_IN	50_B2_B3_CPL_IN - @radio_mlb_lib.RADIO_MLB	12C3 13C2
50_B2_DPLX_ANT	50_B2_DPLX_ANT - @radio_mlb_lib.RADIO_MLB	12C4
50_B2_DPLX_ANT_MATCH	50_B2_DPLX_ANT_MATCH - @radio_mlb_lib.RADIO_MLB	12C3
50_B2_DUPLX_RX	50_B2_DUPLX_RX - @radio_mlb_lib.RADIO_MLB	9C7 12C5
50_B2_RX_BALUN	50_B2_RX_BALUN - @radio_mlb_lib.RADIO_MLB	9C7
50_B2_TX_PAD_IN	50_B2_TX_PAD_IN - @radio_mlb_lib.RADIO_MLB	12C6
50_B2_TX_SAW_IN	50_B2_TX_SAW_IN - @radio_mlb_lib.RADIO_MLB	10D7
50_B2_TX_SAW_OUT	50_B2_TX_SAW_OUT - @radio_mlb_lib.RADIO_MLB	10D5 12C7
50_B3_ANT	50_B3_ANT - @radio_mlb_lib.RADIO_MLB	12C2 17B7
50_B3_DPLX_ANT	50_B3_DPLX_ANT - @radio_mlb_lib.RADIO_MLB	12C4
50_B3_DPLX_ANT_MATCH	50_B3_DPLX_ANT_MATCH - @radio_mlb_lib.RADIO_MLB	12C3
50_B3_DUPLX_RX	50_B3_DUPLX_RX - @radio_mlb_lib.RADIO_MLB	9C7 12C5
50_B3_RX_BALUN	50_B3_RX_BALUN - @radio_mlb_lib.RADIO_MLB	9B7
50_B3_TX_PAD_IN	50_B3_TX_PAD_IN - @radio_mlb_lib.RADIO_MLB	12C6
50_B3_TX_SAW_MATCH	50_B3_TX_SAW_MATCH - @radio_mlb_lib.RADIO_MLB	10C2
50_B3_TX_SAW_OUT	50_B3_TX_SAW_OUT - @radio_mlb_lib.RADIO_MLB	10C1 12C7
50_B5_ANT	50_B5_ANT - @radio_mlb_lib.RADIO_MLB	14C2 17B7
50_B5_B8_CPL_IN	50_B5_B8_CPL_IN - @radio_mlb_lib.RADIO_MLB	11C4 14D3
50_B5_B18_TX_SAW_IN	50_B5_B18_TX_SAW_IN - @radio_mlb_lib.RADIO_MLB	10D7
50_B5_DPLX_ANT	50_B5_DPLX_ANT - @radio_mlb_lib.RADIO_MLB	14C3
50_B5_TX_PAD_IN	50_B5_TX_PAD_IN - @radio_mlb_lib.RADIO_MLB	14C6
50_B5_TX_SAW_OUT	50_B5_TX_SAW_OUT - @radio_mlb_lib.RADIO_MLB	10D5 14C7
50_B7_ANT	50_B7_ANT - @radio_mlb_lib.RADIO_MLB	13B2 17B7
50_B7_B38_B40_PRX_BALUN_IN	50_B7_B38_B40_PRX_BALUN_IN - @radio_mlb_lib.RADIO_MLB	9C5 11D1
50_B7_B38_B40_SPDT	50_B7_B38_B40_SPDT - @radio_mlb_lib.RADIO_MLB	20C3
50_B7_DPLX_ANT	50_B7_DPLX_ANT - @radio_mlb_lib.RADIO_MLB	13B3
50_B7_DUPLX_RX	50_B7_DUPLX_RX - @radio_mlb_lib.RADIO_MLB	11D1 13B4
50_B7_RX_SP3T_IN	50_B7_RX_SP3T_IN - @radio_mlb_lib.RADIO_MLB	11D2
50_B7_TX_FILT_IN	50_B7_TX_FILT_IN - @radio_mlb_lib.RADIO_MLB	10B4 13C8
50_B7_TX_FILT_MATCH	50_B7_TX_FILT_MATCH - @radio_mlb_lib.RADIO_MLB	13C7
50_B7_TX_FILT_OUT	50_B7_TX_FILT_OUT - @radio_mlb_lib.RADIO_MLB	13C6
50_B7_TX_PAD_IN	50_B7_TX_PAD_IN - @radio_mlb_lib.RADIO_MLB	13C5
50_B7_TX_SPDT_OUT	50_B7_TX_SPDT_OUT - @radio_mlb_lib.RADIO_MLB	10B5
50_B8_ANT	50_B8_ANT - @radio_mlb_lib.RADIO_MLB	14C2 17B7
50_B8_DPLX_ANT	50_B8_DPLX_ANT - @radio_mlb_lib.RADIO_MLB	14C3
50_B8_TX_PAD_IN	50_B8_TX_PAD_IN - @radio_mlb_lib.RADIO_MLB	14C6
50_B8_TX_SAW_IN	50_B8_TX_SAW_IN - @radio_mlb_lib.RADIO_MLB	10C7
50_B8_TX_SAW_OUT	50_B8_TX_SAW_OUT - @radio_mlb_lib.RADIO_MLB	10C5 14C7
50_B20_ANT	50_B20_ANT - @radio_mlb_lib.RADIO_MLB	13C1 17B7
50_B20_DPLX_ANT	50_B20_DPLX_ANT - @radio_mlb_lib.RADIO_MLB	13C3
50_B20_TX_PAD_IN	50_B20_TX_PAD_IN - @radio_mlb_lib.RADIO_MLB	13C5
50_B20_TX_SAW_IN	50_B20_TX_SAW_IN - @radio_mlb_lib.RADIO_MLB	10C5 13C8
50_B20_TX_SAW_MATCH	50_B20_TX_SAW_MATCH - @radio_mlb_lib.RADIO_MLB	13C8
50_B20_TX_SAW_OUT	50_B20_TX_SAW_OUT - @radio_mlb_lib.RADIO_MLB	13C6
50_B34_B39_PA_FILT_IN	50_B34_B39_PA_FILT_IN - @radio_mlb_lib.RADIO_MLB	11C4
50_B34_B39_PA_FILT_OUT	50_B34_B39_PA_FILT_OUT - @radio_mlb_lib.RADIO_MLB	11C3
50_B34_B39_PA_OUT	50_B34_B39_PA_OUT - @radio_mlb_lib.RADIO_MLB	11C4
50_B34_B39_RX_ASM	50_B34_B39_RX_ASM - @radio_mlb_lib.RADIO_MLB	11B1 17B7
50_B34_B39_TX_ASM	50_B34_B39_TX_ASM - @radio_mlb_lib.RADIO_MLB	11C1 17B7
50_B34_B39_TX_FILT_IN	50_B34_B39_TX_FILT_IN - @radio_mlb_lib.RADIO_MLB	10D4
50_B34_PA_IN	50_B34_PA_IN - @radio_mlb_lib.RADIO_MLB	11C7
50_B34_TX_SAW_OUT	50_B34_TX_SAW_OUT - @radio_mlb_lib.RADIO_MLB	10D1 11C8
50_B38_B40_DRX_AUX2_OUT	50_B38_B40_DRX_AUX2_OUT - @radio_mlb_lib.RADIO_MLB	18A7
50_B38_B40_DRX_FILT_IN	50_B38_B40_DRX_FILT_IN - @radio_mlb_lib.RADIO_MLB	18A6
50_B38_B40_PA_IN	50_B38_B40_PA_IN - @radio_mlb_lib.RADIO_MLB	11B7
50_B38_B40_SPDT	50_B38_B40_SPDT - @radio_mlb_lib.RADIO_MLB	9B2 17C2
50_B38_B40_TX_FILT_ANT	50_B38_B40_TX_FILT_ANT - @radio_mlb_lib.RADIO_MLB	9B3
50_B38_B40_TX_MATCH	50_B38_B40_TX_MATCH - @radio_mlb_lib.RADIO_MLB	11B7
50_B38_B40_TX_SPDT_MATCH	50_B38_B40_TX_SPDT_MATCH - @radio_mlb_lib.RADIO_MLB	10B4 11B8
50_B38_B40_TX_SPDT_OUT	50_B38_B40_TX_SPDT_OUT - @radio_mlb_lib.RADIO_MLB	10B5
50_B38_DRX_FILT_OUT	50_B38_DRX_FILT_OUT - @radio_mlb_lib.RADIO_MLB	18A5
50_B38_DRX_MOD_IN	50_B38_DRX_MOD_IN - @radio_mlb_lib.RADIO_MLB	18B4
50_B38_FILTER	50_B38_FILTER - @radio_mlb_lib.RADIO_MLB	9B5 11D1
50_B38_FILTER_MATCH	50_B38_FILTER_MATCH - @radio_mlb_lib.RADIO_MLB	9B4
50_B38_PA_MATCH	50_B38_PA_MATCH - @radio_mlb_lib.RADIO_MLB	11D4
50_B38_PA_OUT	50_B38_PA_OUT - @radio_mlb_lib.RADIO_MLB	11D4
50_B39_PA_IN	50_B39_PA_IN - @radio_mlb_lib.RADIO_MLB	11C7
50_B39_TX_SAW_OUT	50_B39_TX_SAW_OUT - @radio_mlb_lib.RADIO_MLB	10D1 11C8
50_B40_DRX_FILT_OUT	50_B40_DRX_FILT_OUT - @radio_mlb_lib.RADIO_MLB	18A5
50_B40_DRX_MOD_IN	50_B40_DRX_MOD_IN - @radio_mlb_lib.RADIO_MLB	18A4
50_B40_FILTER	50_B40_FILTER - @radio_mlb_lib.RADIO_MLB	9A5 11D1
50_B40_FILTER_MATCH	50_B40_FILTER_MATCH - @radio_mlb_lib.RADIO_MLB	9A4
50_B40_PA_MATCH	50_B40_PA_MATCH - @radio_mlb_lib.RADIO_MLB	11C4
50_B40_PA_OUT	50_B40_PA_OUT - @radio_mlb_lib.RADIO_MLB	11C4
50_DCS_RX_ASM	50_DCS_RX_ASM - @radio_mlb_lib.RADIO_MLB	11B1 17B7
50_DIVERSITY_SWITCH_MATCH	50_DIVERSITY_SWITCH_MATCH - @radio_mlb_lib.RADIO_MLB	18C4
50_DRX_ANT	50_DRX_ANT - @radio_mlb_lib.RADIO_MLB	17B4 18D6
50_DRX_ASM_MCH	50_DRX_ASM_MCH - @radio_mlb_lib.RADIO_MLB	18D6
50_DRX_MOD_TERM	50_DRX_MOD_TERM - @radio_mlb_lib.RADIO_MLB	18C3
50_EXTRACTOR_CELL	50_EXTRACTOR_CELL - @radio_mlb_lib.RADIO_MLB	20C3
50_EXTRACTOR_DIPLEX_1	50_EXTRACTOR_DIPLEX_1 - @radio_mlb_lib.RADIO_MLB	20B5
50_EXTRACTOR_WIFI	50_EXTRACTOR_WIFI - @radio_mlb_lib.RADIO_MLB	20C4
50_FULL_B40_FILTER	50_FULL_B40_FILTER - @radio_mlb_lib.RADIO_MLB	9A5 11D1
50_FULL_B40_FILTER_MATCH	50_FULL_B40_FILTER_MATCH - @radio_mlb_lib.RADIO_MLB	9A4
50_FULL_B40_SPDT	50_FULL_B40_SPDT - @radio_mlb_lib.RADIO_MLB	9A2 17C2
50_FULL_B40_SPDT_MATCH	50_FULL_B40_SPDT_MATCH - @radio_mlb_lib.RADIO_MLB	9A3
50_GPS_ANT	50_GPS_ANT - @radio_mlb_lib.RADIO_MLB	19B7
50_GPS_ANT_CONN	50_GPS_ANT_CONN - @radio_mlb_lib.RADIO_MLB	19B6
50_GPS_ANT_FEED	50_GPS_ANT_FEED - @radio_mlb_lib.RADIO_MLB	19B5
50_GPS_DRX_MOD_IN	50_GPS_DRX_MOD_IN - @radio_mlb_lib.RADIO_MLB	18C4
50_GPS_LNA_OUT	50_GPS_LNA_OUT - @radio_mlb_lib.RADIO_MLB	18B6 19B3
50_HSIC_BB_DATA	50_HSIC_BB_DATA - @radio_mlb_lib.RADIO_MLB	2B1 2B6 2C8 5B3
50_HSIC_BB_STROBE	50_HSIC_BB_STROBE - @radio_mlb_lib.RADIO_MLB	2B1 2B6 2C8 5B3
50_HSIC_CAL	50_HSIC_CAL - @radio_mlb_lib.RADIO_MLB	5B3
50_HSIC_WLAN_DATA	50_HSIC_WLAN_DATA - @radio_mlb_lib.RADIO_MLB	2B6 2C8 23B6
50_HSIC_WLAN_STROBE	50_HSIC_WLAN_STROBE - @radio_mlb_lib.RADIO_MLB	2B6 2C8 23B6
50_LAT_COAX	50_LAT_COAX - @radio_mlb_lib.RADIO_MLB	20A6
50_LAT_MATCH	50_LAT_MATCH - @radio_mlb_lib.RADIO_MLB	20A5
50_LAT_TEST	50_LAT_TEST - @radio_mlb_lib.RADIO_MLB	17B3 20A3
50_MBPA_CPL_IN	50_MBPA_CPL_IN - @radio_mlb_lib.RADIO_MLB	11C4 12C3
50_NTCH_FILT_OUT	50_NTCH_FILT_OUT - @radio_mlb_lib.RADIO_MLB	20D7
50_PA_ISO	50_PA_ISO - @radio_mlb_lib.RADIO_MLB	13C3
50_PDET_IN	50_PDET_IN - @radio_mlb_lib.RADIO_MLB	7C3
50_PDET_PAD_IN	50_PDET_PAD_IN - @radio_mlb_lib.RADIO_MLB	7C1 14C3
50_PDET_PAD_OUT	50_PDET_PAD_OUT - @radio_mlb_lib.RADIO_MLB	7C2
50_RX_MOD_B34_B39_IN	50_RX_MOD_B34_B39_IN - @radio_mlb_lib.RADIO_MLB	11B2
50_RX_MOD_DCS_IN	50_RX_MOD_DCS_IN - @radio_mlb_lib.RADIO_MLB	11B2
50_TXRX_B38_B40_ASM	50_TXRX_B38_B40_ASM - @radio_mlb_lib.RADIO_MLB	17B5
50_TXRX_B38_B40_SPDT	50_TXRX_B38_B40_SPDT - @radio_mlb_lib.RADIO_MLB	17C3
50_TX_G_HB_ASM	50_TX_G_HB_ASM - @radio_mlb_lib.RADIO_MLB	15B2 17B4
50_TX_G_HB_MCH	50_TX_G_HB_MCH - @radio_mlb_lib.RADIO_MLB	15C7
50_TX_G_HB_PAIN	50_TX_G_HB_PAIN - @radio_mlb_lib.RADIO_MLB	15C6
50_TX_G_HB_PAOUT	50_TX_G_HB_PAOUT - @radio_mlb_lib.RADIO_MLB	15B4
50_TX_G_LB_ASM	50_TX_G_LB_ASM - @radio_mlb_lib.RADIO_MLB	15B2 17B4
50_TX_G_LB_MCH	50_TX_G_LB_MCH - @radio_mlb_lib.RADIO_MLB	15B7
50_TX_G_LB_PAIN	50_TX_G_LB_PAIN - @radio_mlb_lib.RADIO_MLB	15B6
50_TX_G_LB_PAOUT	50_TX_G_LB_PAOUT - @radio_mlb_lib.RADIO_MLB	15B4
50_UAT1_LPF	50_UAT1_LPF - @radio_mlb_lib.RADIO_MLB	20D3
50_UAT2_ANT_FD	50_UAT2_ANT_FD - @radio_mlb_lib.RADIO_MLB	20B8
50_UAT2_ANT_MATCH	50_UAT2_ANT_MATCH - @radio_mlb_lib.RADIO_MLB	20B7
50_UAT2_ANT_MATCH_T	50_UAT2_ANT_MATCH_T - @radio_mlb_lib.RADIO_MLB	20B7
50_UAT2_DIPLEX	50_UAT2_DIPLEX - @radio_mlb_lib.RADIO_MLB	20C6
50_UAT2_LPF	50_UAT2_LPF - @radio_mlb_lib.RADIO_MLB	20C5
50_UAT_CELL	50_UAT_CELL - @radio_mlb_lib.RADIO_MLB	20D4
50_UAT_COAX_DOWN	50_UAT_COAX_DOWN - @radio_mlb_lib.RADIO_MLB	20C2
50_UAT_COAX_UP	50_UAT_COAX_UP - @radio_mlb_lib.RADIO_MLB	17B4 20C1
50_UAT_TEST	50_UAT_TEST - @radio_mlb_lib.RADIO_MLB	20D3
50_UPPER_ANT_FEED	50_UPPER_ANT_FEED - @radio_mlb_lib.RADIO_MLB	20D8
50_UPPER_MCH_1	50_UPPER_MCH_1 - @radio_mlb_lib.RADIO_MLB	20D6
50_WLAN_A	50_WLAN_A - @radio_mlb_lib.RADIO_MLB	20C6 23C1
50_WLAN_A_ANT	50_WLAN_A_ANT - @radio_mlb_lib.RADIO_MLB	23C4
50_WLAN_G	50_WLAN_G - @radio_mlb_lib.RADIO_MLB	20C4 23C1
50_WLAN_G_ANT	50_WLAN_G_ANT - @radio_mlb_lib.RADIO_MLB	23C4
50_XCVR_2G_HB_TX	50_XCVR_2G_HB_TX - @radio_mlb_lib.RADIO_MLB	7D2 15C8
50_XCVR_2G_LB_TX	50_XCVR_2G_LB_TX - @radio_mlb_lib.RADIO_MLB	7D2 15B8
50_XCVR_B1_B3_TX	50_XCVR_B1_B3_TX - @radio_mlb_lib.RADIO_MLB	7D2 10C5
50_XCVR_B2_TX	50_XCVR_B2_TX - @radio_mlb_lib.RADIO_MLB	7D2 10D8
50_XCVR_B5_B18_TX	50_XCVR_B5_B18_TX - @radio_mlb_lib.RADIO_MLB	7D2 10D8
50_XCVR_B7_B38_B40_TX	50_XCVR_B7_B38_B40_TX - @radio_mlb_lib.RADIO_MLB	7C2 10B7
50_XCVR_B7_B38_B40_TX_MATCH	50_XCVR_B7_B38_B40_TX_MATCH - @radio_mlb_lib.RADIO_MLB	10B6
50_XCVR_B8_TX	50_XCVR_B8_TX - @radio_mlb_lib.RADIO_MLB	7D2 10C8
50_XCVR_B20_TX	50_XCVR_B20_TX - @radio_mlb_lib.RADIO_MLB	7D2 10C8
50_XCVR_B34_B39_TX	50_XCVR_B34_B39_TX - @radio_mlb_lib.RADIO_MLB	7D2 10D5
90_BB_USB_D_N	90_BB_USB_D_N - @radio_mlb_lib.RADIO_MLB	2C3 2C8 5A5
90_BB_USB_D_P	90_BB_USB_D_P - @radio_mlb_lib.RADIO_MLB	2C3 2C8 5A5
100_B5_DUPLX_RX_N	100_B5_DUPLX_RX_N - @radio_mlb_lib.RADIO_MLB	9C4 14C5
100_B5_DUPLX_RX_P	100_B5_DUPLX_RX_P - @radio_mlb_lib.RADIO_MLB	9C4 14C5
100_B7_B38_B40_PRX_BALUN_OUT_N	100_B7_B38_B40_PRX_BALUN_OUT_N - @radio_mlb_lib.RADIO_MLB	9C4
100_B7_B38_B40_PRX_BALUN_OUT_P	100_B7_B38_B40_PRX_BALUN_OUT_P - @radio_mlb_lib.RADIO_MLB	9B4
100_B7_B38_B40_PRX_MATCH_N	100_B7_B38_B40_PRX_MATCH_N - @radio_mlb_lib.RADIO_MLB	9C3
100_B7_B38_B40_PRX_MATCH_P	100_B7_B38_B40_PRX_MATCH_P - @radio_mlb_lib.RADIO_MLB	9B3
100_B8_DUPLX_RX_N	100_B8_DUPLX_RX_N - @radio_mlb_lib.RADIO_MLB	9D4 14C5
100_B8_DUPLX_RX_P	100_B8_DUPLX_RX_P - @radio_mlb_lib.RADIO_MLB	9D4 14C5
100_B20_DUPLX_RX_N	100_B20_DUPLX_RX_N - @radio_mlb_lib.RADIO_MLB	9B7 13B4
100_B20_DUPLX_RX_P	100_B20_DUPLX_RX_P - @radio_mlb_lib.RADIO_MLB	9A7 13B4
100_RX_MODULE_OUT_N	100_RX_MODULE_OUT_N - @radio_mlb_lib.RADIO_MLB	9D7 11B5
100_RX_MODULE_OUT_P	100_RX_MODULE_OUT_P - @radio_mlb_lib.RADIO_MLB	9D7 11B5
100_XCVR_B1_B2_B3_B34_B39_DRX_N	100_XCVR_B1_B2_B3_B34_B39_DRX_N - @radio_mlb_lib.RADIO_MLB	7C8 18C2
100_XCVR_B1_B2_B3_B34_B39_DRX_P	100_XCVR_B1_B2_B3_B34_B39_DRX_P - @radio_mlb_lib.RADIO_MLB	7C8 18C2
100_XCVR_B1_B34_B39_DCS_PRX_N	100_XCVR_B1_B34_B39_DCS_PRX_N - @radio_mlb_lib.RADIO_MLB	7C8 9D5
100_XCVR_B1_B34_B39_DCS_PRX_P	100_XCVR_B1_B34_B39_DCS_PRX_P - @radio_mlb_lib.RADIO_MLB	7C8 9D5
100_XCVR_B2_PRX_N	100_XCVR_B2_PRX_N - @radio_mlb_lib.RADIO_MLB	7C8 9C5
100_XCVR_B2_PRX_P	100_XCVR_B2_PRX_P - @radio_mlb_lib.RADIO_MLB	7D8 9C5
100_XCVR_B3_PRX_N	100_XCVR_B3_PRX_N - @radio_mlb_lib.RADIO_MLB	7C8 9C5
100_XCVR_B3_PRX_P	100_XCVR_B3_PRX_P - @radio_mlb_lib.RADIO_MLB	7C8 9B5
100_XCVR_B5_B18_DRX_N	100_XCVR_B5_B18_DRX_N - @radio_mlb_lib.RADIO_MLB	7C8 18C2
100_XCVR_B5_B18_DRX_P	100_XCVR_B5_B18_DRX_P - @radio_mlb_lib.RADIO_MLB	7C8 18C2
100_XCVR_B5_B18_PRX_N	100_XCVR_B5_B18_PRX_N - @radio_mlb_lib.RADIO_MLB	7D8 9C3
100_XCVR_B5_B18_PRX_P	100_XCVR_B5_B18_PRX_P - @radio_mlb_lib.RADIO_MLB	7D8 9C3
100_XCVR_B7_B38_B40_DRX_N	100_XCVR_B7_B38_B40_DRX_N - @radio_mlb_lib.RADIO_MLB	7C8 18C2
100_XCVR_B7_B38_B40_DRX_P	100_XCVR_B7_B38_B40_DRX_P - @radio_mlb_lib.RADIO_MLB	7C8 18C2
100_XCVR_B7_B38_B40_PRX_N	100_XCVR_B7_B38_B40_PRX_N - @radio_mlb_lib.RADIO_MLB	7C8 9C2
100_XCVR_B7_B38_B40_PRX_P	100_XCVR_B7_B38_B40_PRX_P - @radio_mlb_lib.RADIO_MLB	7C8 9B2
100_XCVR_B8_B20_DRX_N	100_XCVR_B8_B20_DRX_N - @radio_mlb_lib.RADIO_MLB	7C8 18C2
100_XCVR_B8_B20_DRX_P	100_XCVR_B8_B20_DRX_P - @radio_mlb_lib.RADIO_MLB	7C8 18C2
100_XCVR_B8_PRX_N	100_XCVR_B8_PRX_N - @radio_mlb_lib.RADIO_MLB	7D8 9D3
100_XCVR_B8_PRX_P	100_XCVR_B8_PRX_P - @radio_mlb_lib.RADIO_MLB	7D8 9D3
100_XCVR_B20_PRX_N	100_XCVR_B20_PRX_N - @radio_mlb_lib.RADIO_MLB	7D8 9B5
100_XCVR_B20_PRX_P	100_XCVR_B20_PRX_P - @radio_mlb_lib.RADIO_MLB	7D8 9A5
100_XCVR_GPS_RX_MATCH_N	100_XCVR_GPS_RX_MATCH_N - @radio_mlb_lib.RADIO_MLB	18C4
100_XCVR_GPS_RX_MATCH_P	100_XCVR_GPS_RX_MATCH_P - @radio_mlb_lib.RADIO_MLB	18C4
100_XCVR_GPS_RX_N	100_XCVR_GPS_RX_N - @radio_mlb_lib.RADIO_MLB	7B8 18C6
100_XCVR_GPS_RX_P	100_XCVR_GPS_RX_P - @radio_mlb_lib.RADIO_MLB	7B8 18B6
ADC_LDO6_RUIM_1V8	ADC_LDO6_RUIM_1V8 - @radio_mlb_lib.RADIO_MLB	2A7 2B8
ADC_LVS1	ADC_LVS1 - @radio_mlb_lib.RADIO_MLB	2A7 2A8
ADC_SMPS1_MSMC_1V05	ADC_SMPS1_MSMC_1V05 - @radio_mlb_lib.RADIO_MLB	2A7 2B8
ADC_SMPS3_MSME_1V8	ADC_SMPS3_MSME_1V8 - @radio_mlb_lib.RADIO_MLB	2A7 2B8
ANT_SEL_0	ANT_SEL_0 - @radio_mlb_lib.RADIO_MLB	6C2 11D4 17B3 18C6
ANT_SEL_1	ANT_SEL_1 - @radio_mlb_lib.RADIO_MLB	2C3 6C2 11D4 17B3 18C6
ANT_SEL_2	ANT_SEL_2 - @radio_mlb_lib.RADIO_MLB	2C1 6C2 17B3 18C6
ANT_SEL_3	ANT_SEL_3 - @radio_mlb_lib.RADIO_MLB	6C2 17B3 18C6
ANT_SEL_4	ANT_SEL_4 - @radio_mlb_lib.RADIO_MLB	6C2 17B3
AP_HSIC1_RDY	AP_HSIC1_RDY - @radio_mlb_lib.RADIO_MLB	2C1 2C8 6B2
AP_HSIC3_RDY	AP_HSIC3_RDY - @radio_mlb_lib.RADIO_MLB	2C6 2C8 23B3
AP_WAKE_MODEM	AP_WAKE_MODEM - @radio_mlb_lib.RADIO_MLB	2D8 6B4
BB_ERROR_FLAG	BB_ERROR_FLAG - @radio_mlb_lib.RADIO_MLB	2D6 6B2
BB_HSIC1_REMOTE_WAKE	BB_HSIC1_REMOTE_WAKE - @radio_mlb_lib.RADIO_MLB	2C8 6B2
BB_I2S2_CLK	BB_I2S2_CLK - @radio_mlb_lib.RADIO_MLB	2A8 6B4
BB_I2S2_RXD	BB_I2S2_RXD - @radio_mlb_lib.RADIO_MLB	2A8 6B4
BB_I2S2_WS	BB_I2S2_WS - @radio_mlb_lib.RADIO_MLB	2A8 6B4
BB_I2S_CLK	BB_I2S_CLK - @radio_mlb_lib.RADIO_MLB	2B6 2C8 6B4
BB_I2S_MCLK	BB_I2S_MCLK - @radio_mlb_lib.RADIO_MLB	2A8 6B4
BB_I2S_RXD	BB_I2S_RXD - @radio_mlb_lib.RADIO_MLB	2B6 2C8 6B4
BB_I2S_TXD	BB_I2S_TXD - @radio_mlb_lib.RADIO_MLB	2A6 2C8 6B4
BB_I2S_WS	BB_I2S_WS - @radio_mlb_lib.RADIO_MLB	2B6 2C8 6B4
BB_IPC_GPIO	BB_IPC_GPIO - @radio_mlb_lib.RADIO_MLB	2A8 6B2
BB_JTAG_RTCLK	BB_JTAG_RTCLK - @radio_mlb_lib.RADIO_MLB	2C3 5B3
BB_JTAG_TCK	BB_JTAG_TCK - @radio_mlb_lib.RADIO_MLB	2B8 2C3 5B5
BB_JTAG_TDI	BB_JTAG_TDI - @radio_mlb_lib.RADIO_MLB	2B8 2C3 5B5
BB_JTAG_TDO	BB_JTAG_TDO - @radio_mlb_lib.RADIO_MLB	2B8 2C3 5B3
BB_JTAG_TMS	BB_JTAG_TMS - @radio_mlb_lib.RADIO_MLB	2B8 2C3 5B5
BB_JTAG_TRST_L	BB_JTAG_TRST_L - @radio_mlb_lib.RADIO_MLB	2B8 2C3 5B5
BB_PDM	BB_PDM - @radio_mlb_lib.RADIO_MLB	6B2 16C7
BB_PDM_FILT	BB_PDM_FILT - @radio_mlb_lib.RADIO_MLB	16C6
BB_RST_L	BB_RST_L - @radio_mlb_lib.RADIO_MLB	2C1 2D8 4C8
BB_SPI_TO_PAC_CLK	BB_SPI_TO_PAC_CLK - @radio_mlb_lib.RADIO_MLB	2B8 6C4 20C7
BB_SPI_TO_PAC_CLK_FILT	BB_SPI_TO_PAC_CLK_FILT - @radio_mlb_lib.RADIO_MLB	20C6
BB_SPI_TO_PAC_CS	BB_SPI_TO_PAC_CS - @radio_mlb_lib.RADIO_MLB	2B8 6C4 20D7
BB_SPI_TO_PAC_CS_FILT	BB_SPI_TO_PAC_CS_FILT - @radio_mlb_lib.RADIO_MLB	20D6
BB_SPI_TO_PAC_DATA_MOSI	BB_SPI_TO_PAC_DATA_MOSI - @radio_mlb_lib.RADIO_MLB	2B8 6C4 20C7
BB_SPI_TO_PAC_DATA_MOSI_FILT	BB_SPI_TO_PAC_DATA_MOSI_FILT - @radio_mlb_lib.RADIO_MLB	20C6
BB_UART_CTS_L	BB_UART_CTS_L - @radio_mlb_lib.RADIO_MLB	2C3 2C8 6C4
BB_UART_RTS_L	BB_UART_RTS_L - @radio_mlb_lib.RADIO_MLB	2C3 2C8 6C4
BB_UART_RXD	BB_UART_RXD - @radio_mlb_lib.RADIO_MLB	2C3 2C8 6C4
BB_UART_TXD	BB_UART_TXD - @radio_mlb_lib.RADIO_MLB	2C3 2C8 6C4
BB_USB_VBUS	BB_USB_VBUS -	2C3 2C8 5A5

	@radio_mlb_lib.RADIO_MLB	
BOARD_ID	BOARD_ID - @radio_mlb_lib.RADIO_MLB	4D4
BS_SP2T_CTL	BS_SP2T_CTL -	6B2 20B1
	@radio_mlb_lib.RADIO_MLB	
BT_PCM_CLK	BT_PCM_CLK -	2B8 23B3
	@radio_mlb_lib.RADIO_MLB	
BT_PCM_IN	BT_PCM_IN -	2B8 23B3
	@radio_mlb_lib.RADIO_MLB	
BT_PCM_OUT	BT_PCM_OUT -	2B8 23B3
	@radio_mlb_lib.RADIO_MLB	
BT_PCM_SYNC	BT_PCM_SYNC -	2B8 23B3
	@radio_mlb_lib.RADIO_MLB	
BT_REG_ON	BT_REG_ON -	2B8 2C1 23C6
	@radio_mlb_lib.RADIO_MLB	
BT_UART_CTS_L	BT_UART_CTS_L -	2B8 23B3
	@radio_mlb_lib.RADIO_MLB	
BT_UART_RTS_L	BT_UART_RTS_L -	2B8 23C3
	@radio_mlb_lib.RADIO_MLB	
BT_UART_RXD	BT_UART_RXD -	2B6 2B8 23C3
	@radio_mlb_lib.RADIO_MLB	
BT_UART_TXD	BT_UART_TXD -	2B6 2B8 23C3
	@radio_mlb_lib.RADIO_MLB	
BT_WAKE	BT_WAKE - @radio_mlb_lib.RADIO_MLB	2B8 2D1 23C2
CLK32K_AP	CLK32K_AP -	2C8 2D6 23C7
	@radio_mlb_lib.RADIO_MLB	
DCDC_ADJ	DCDC_ADJ - @radio_mlb_lib.RADIO_MLB	16C5
DCDC_EN	DCDC_EN - @radio_mlb_lib.RADIO_MLB	6C2 16C5
DCDC_MODE	DCDC_MODE -	6B2 16B5
	@radio_mlb_lib.RADIO_MLB	
DCDC_OUT	DCDC_OUT - @radio_mlb_lib.RADIO_MLB	16B4
DCDC_PGND	DCDC_PGND -	16B3 16B4 16C4 16C5
	@radio_mlb_lib.RADIO_MLB	
DEBUG_RST_L	DEBUG_RST_L -	2D3 5B5
	@radio_mlb_lib.RADIO_MLB	
DRX_BB_I_N	DRX_BB_I_N -	6C8 7C5
	@radio_mlb_lib.RADIO_MLB	
DRX_BB_I_P	DRX_BB_I_P -	6C8 7C5
	@radio_mlb_lib.RADIO_MLB	
DRX_BB_Q_N	DRX_BB_Q_N -	6C8 7C5
	@radio_mlb_lib.RADIO_MLB	
DRX_BB_Q_P	DRX_BB_Q_P -	6C8 7C5
	@radio_mlb_lib.RADIO_MLB	
EBI1_CAL	EBI1_CAL - @radio_mlb_lib.RADIO_MLB	5D2
GPIO_6	GPIO_6 - @radio_mlb_lib.RADIO_MLB	23C5
GPIO_51	GPIO_51 - @radio_mlb_lib.RADIO_MLB	2C3 6C2
GPIO_DEBUG_LED	GPIO_DEBUG_LED -	2C3 6B4
	@radio_mlb_lib.RADIO_MLB	
GPS_BB_I_N	GPS_BB_I_N -	6C8 7B5
	@radio_mlb_lib.RADIO_MLB	
GPS_BB_I_P	GPS_BB_I_P -	6C8 7B5
	@radio_mlb_lib.RADIO_MLB	
GPS_BB_Q_N	GPS_BB_Q_N -	6C8 7B5
	@radio_mlb_lib.RADIO_MLB	
GPS_BB_Q_P	GPS_BB_Q_P -	6C8 7B5
	@radio_mlb_lib.RADIO_MLB	
GSM_PA_HB_EN	GSM_PA_HB_EN -	6B4 15B5
	@radio_mlb_lib.RADIO_MLB	
GSM_PA_LB_EN	GSM_PA_LB_EN -	6B4 15B5
	@radio_mlb_lib.RADIO_MLB	
HOST_WAKE_BB	HOST_WAKE_BB -	2C1 2D8 6B2
	@radio_mlb_lib.RADIO_MLB	
HOST_WAKE_BT	HOST_WAKE_BT -	2C8 23C3
	@radio_mlb_lib.RADIO_MLB	
HOST_WAKE_WLAN	HOST_WAKE_WLAN -	2C8 23B3
	@radio_mlb_lib.RADIO_MLB	
JTAG_SEL	JTAG_SEL - @radio_mlb_lib.RADIO_MLB	23A7 23C6
LAT_SW1_CTL	LAT_SW1_CTL -	2B8 2C1 6C2
	@radio_mlb_lib.RADIO_MLB	
LAT_SW2_CTL	LAT_SW2_CTL -	2B8 6C2
	@radio_mlb_lib.RADIO_MLB	
LAT_SW3_CTL	LAT_SW3_CTL -	2B8 6C2
	@radio_mlb_lib.RADIO_MLB	
LTE_ACTIVE	LTE_ACTIVE -	6B2 23B3
	@radio_mlb_lib.RADIO_MLB	
LTE_AGG_PA_ON	LTE_AGG_PA_ON -	6B4 23B4
	@radio_mlb_lib.RADIO_MLB	
LTE_COEX_RXD	LTE_COEX_RXD -	6B2 23A6
	@radio_mlb_lib.RADIO_MLB	
LTE_COEX_TXD	LTE_COEX_TXD -	2C6 6B2 23A6
	@radio_mlb_lib.RADIO_MLB	
OSCAR_CONTEXT_A	OSCAR_CONTEXT_A -	2A8 6B2 23B3
	@radio_mlb_lib.RADIO_MLB	
OSCAR_CONTEXT_B	OSCAR_CONTEXT_B -	2A8 6B2 23B3
	@radio_mlb_lib.RADIO_MLB	
PAC_TO_BB_SPI_DATA_M	PAC_TO_BB_SPI_DATA_MISO -	2B8 6C4 20D7
ISO	@radio_mlb_lib.RADIO_MLB	
PAC_TO_BB_SPI_DATA_M	PAC_TO_BB_SPI_DATA_MISO_FILT -	20D6
ISO_FILT	@radio_mlb_lib.RADIO_MLB	
PA_BS	PA_BS - @radio_mlb_lib.RADIO_MLB	6B4 11D8 12D4 13C3 14D4
PA_ID	PA_ID - @radio_mlb_lib.RADIO_MLB	4D3
PA_MB_CTL0	PA_MB_CTL0 -	6B4 10B6 11D8
	@radio_mlb_lib.RADIO_MLB	
PA_MB_CTL1	PA_MB_CTL1 -	6B4 11D8
	@radio_mlb_lib.RADIO_MLB	
PA_ON_B2_B3	PA_ON_B2_B3 -	6B4 12D4
	@radio_mlb_lib.RADIO_MLB	
PA_ON_B5_B8	PA_ON_B5_B8 -	6B4 14D4
	@radio_mlb_lib.RADIO_MLB	
PA_ON_B7_B20	PA_ON_B7_B20 -	6B4 13C3
	@radio_mlb_lib.RADIO_MLB	
PA_R1	PA_R1 - @radio_mlb_lib.RADIO_MLB	6C2 11D8 12D4 13C3 14D4
		15B5
PBL_RUN_BB_HSIC1_RDY	PBL_RUN_BB_HSIC1_RDY -	2C1 2D8 6B2
	@radio_mlb_lib.RADIO_MLB	
PMIC_RESOUT_L	PMIC_RESOUT_L -	2C1 4C6 5B5
	@radio_mlb_lib.RADIO_MLB	
PMIC_SSBI	PMIC_SSBI -	2D6 4C8 5A5
	@radio_mlb_lib.RADIO_MLB	
PM_MDM_IRQ_L	PM_MDM_IRQ_L -	4C6 6B2
	@radio_mlb_lib.RADIO_MLB	
PM_USR_IRQ_L	PM_USR_IRQ_L -	4C6 6A2
	@radio_mlb_lib.RADIO_MLB	
PP_BATT_VCC_2G_PA	PP_BATT_VCC_2G_PA -	15C4
	@radio_mlb_lib.RADIO_MLB	
PP_BATT_VCC_CONN	PP_BATT_VCC_CONN -	2D1 2D8 3C8 11D7 12D5
	@radio_mlb_lib.RADIO_MLB	13C5 14D6 15C5 16C6
PP_BATT_VCC_PA_DCDC	PP_BATT_VCC_PA_DCDC -	16C5
	@radio_mlb_lib.RADIO_MLB	
PP_BATT_VCC_WLAN	PP_BATT_VCC_WLAN -	23D5
	@radio_mlb_lib.RADIO_MLB	
PP_LDO1	PP_LDO1 - @radio_mlb_lib.RADIO_MLB	3B2
PP_LDO2_XO_HS_1V8	PP_LDO2_XO_HS_1V8 -	3B1 5B5
	@radio_mlb_lib.RADIO_MLB	
PP_LDO3_AMUX_1V8	PP_LDO3_AMUX_1V8 -	3B1 4B5 4D4 5B6

	@radio_mlb_lib.RADIO_MLB	
PP_LDO4_VDDA_3V3	PP_LDO4_VDDA_3V3 -	3B1 5B6
	@radio_mlb_lib.RADIO_MLB	
PP_LDO5_GPS_LNA_2V5	PP_LDO5_GPS_LNA_2V5 -	3B1 19C4
	@radio_mlb_lib.RADIO_MLB	
PP_LDO6_RUIM_1V8	PP_LDO6_RUIM_1V8 -	2A4 2A6 2A8 2D1 3B1 5A6
	@radio_mlb_lib.RADIO_MLB	
PP_LDO7_DAC_1V8	PP_LDO7_DAC_1V8 -	3B1 5A6
	@radio_mlb_lib.RADIO_MLB	
PP_LDO8_VDDPX_1V2	PP_LDO8_VDDPX_1V2 -	3B1 5A6
	@radio_mlb_lib.RADIO_MLB	
PP_LDO9_PLL_1V05	PP_LDO9_PLL_1V05 -	3B1 5B6 5B8 5D8
	@radio_mlb_lib.RADIO_MLB	
PP_LDO10_ADSP_1V05	PP_LDO10_ADSP_1V05 -	3B1 5C6 5D7
	@radio_mlb_lib.RADIO_MLB	
PP_LDO11_MDSP_FW_1V0	PP_LDO11_MDSP_FW_1V05 -	3B1 5C6 5D6
5	@radio_mlb_lib.RADIO_MLB	
PP_LDO12_MDSP_SW_1V0	PP_LDO12_MDSP_SW_1V05 -	3B1 5B6 5D7
5	@radio_mlb_lib.RADIO_MLB	
PP_LDO13_VDDPX_2V95	PP_LDO13_VDDPX_2V95 -	3B1 5A8
	@radio_mlb_lib.RADIO_MLB	
PP_LDO14_2V65	PP_LDO14_2V65 -	2B8 3B1 10B6 11B4 11D4
	@radio_mlb_lib.RADIO_MLB	17C6 17D3 18D4 20D1 20D3
PP_LDO14_3P4T	PP_LDO14_3P4T -	11D3
	@radio_mlb_lib.RADIO_MLB	
PP_LDO14_PAC_2V65	PP_LDO14_PAC_2V65 -	20D5
	@radio_mlb_lib.RADIO_MLB	
PP_LDO14_RX_MOD	PP_LDO14_RX_MOD -	11B3
	@radio_mlb_lib.RADIO_MLB	
PP_LVS1	PP_LVS1 - @radio_mlb_lib.RADIO_MLB	2A8 3D1 5B6
PP_PA	PP_PA - @radio_mlb_lib.RADIO_MLB	11D7 12D5 13C5 14D6 15C5
		16B2
PP_RF1_1V3_DRX_FE	PP_RF1_1V3_DRX_FE -	8B4 8B5
	@radio_mlb_lib.RADIO_MLB	
	PP_RF1_1V3_DRX_LBLO -	8A5 8B4
	@radio_mlb_lib.RADIO_MLB	
	PP_RF1_1V3_DRX_MBLO -	8A5 8B4
	@radio_mlb_lib.RADIO_MLB	
	PP_RF1_1V3_GPS_DIG -	8A1 8D4
	@radio_mlb_lib.RADIO_MLB	
	PP_RF1_1V3_GPS_LNA -	8A1 8D4
	@radio_mlb_lib.RADIO_MLB	
	PP_RF1_1V3_GPS_PLL -	8A1 8D4
	@radio_mlb_lib.RADIO_MLB	
	PP_RF1_1V3_GPS_VCO -	8A1 8D4
	@radio_mlb_lib.RADIO_MLB	
	PP_RF1_1V3_JAM_DET -	8A6 8B4
	@radio_mlb_lib.RADIO_MLB	
	PP_RF1_1V3_PRX_FELO1 -	8B4 8B5
	@radio_mlb_lib.RADIO_MLB	
	PP_RF1_1V3_PRX_FELO2 -	8B4 8B6
	@radio_mlb_lib.RADIO_MLB	
	PP_RF1_1V3_PRX_PLL -	8A4 8D6
	@radio_mlb_lib.RADIO_MLB	
	PP_RF1_1V3_PRX_VCO -	8B4 8D6
	@radio_mlb_lib.RADIO_MLB	
	PP_RF1_1V3_SHDR_PLL -	8A4 8D6
	@radio_mlb_lib.RADIO_MLB	
	PP_RF1_1V3_SHDR_VCO -	8A4 8C6
	@radio_mlb_lib.RADIO_MLB	
	PP_RF1_1V3_TX_DA -	8B1 8C6
	@radio_mlb_lib.RADIO_MLB	
	PP_RF1_1V3_TX_LO -	8B1 8B6
	@radio_mlb_lib.RADIO_MLB	
	PP_RF1_1V3_TX_SYNTH -	8B1 8C6
	@radio_mlb_lib.RADIO_MLB	
	PP_RF1_1V3_TX_UPCONVERTER -	8B1 8B6
	@radio_mlb_lib.RADIO_MLB	
	PP_SMPS2_RF1_1V3_FILT -	8D5 8D8
	@radio_mlb_lib.RADIO_MLB	
	PP_RF1_1V3_TX_UPCONVERTER -	8B1 8B6
	@radio_mlb_lib.RADIO_MLB	
	PP_RF1_1V3_TX_SYNTH -	8B1 8C6
	@radio_mlb_lib.RADIO_MLB	
	PP_RF1_1V3_TX_LO -	8B1 8B6
	@radio_mlb_lib.RADIO_MLB	
	PP_RF1_1V3_TX_DA -	8B1 8C6
	@radio_mlb_lib.RADIO_MLB	
	PP_RF1_1V3_SHDR_VCO -	8A4 8C6
	@radio_mlb_lib.RADIO_MLB	
	PP_RF1_1V3_SHDR_PLL -	8A4 8D6
	@radio_mlb_lib.RADIO_MLB	
	PP_RF1_1V3_PRX_VCO -	8B4 8D6
	@radio_mlb_lib.RADIO_MLB	
	PP_RF1_1V3_PRX_PLL -	8A4 8D6
	@radio_mlb_lib.RADIO_MLB	
	PP_RF1_1V3_PRX_FELO1 -	8B4 8B5
	@radio_mlb_lib.RADIO_MLB	
	PP_RF1_1V3_JAM_DET -	8A6 8B4
	@radio_mlb_lib.RADIO_MLB	
	PP_RF1_1V3_GPS_VCO -	8A1 8D4
	@radio_mlb_lib.RADIO_MLB	
	PP_RF1_1V3_GPS_PLL -	8A1 8D4
	@radio_mlb_lib.RADIO_MLB	
	PP_RF1_1V3_GPS_LNA -	8A1 8D4
	@radio_mlb_lib.RADIO_MLB	
	PP_RF1_1V3_GPS_DIG -	8A1 8D4
	@radio_mlb_lib.RADIO_MLB	
	PP_RF1_1V3_DRX_LBLO -	8A5 8B4
	@radio_mlb_lib.RADIO_MLB	
PP_RF1_1V8_DIG	PP_RF1_1V8_DIG -	8A1 8C4
	@radio_mlb_lib.RADIO_MLB	
	PP_SMPS3_MSME_1V8 -	2A8 2D1 3B6 3C1 5A6 5A6
	@radio_mlb_lib.RADIO_MLB	5A6 5A8 5C6 5D7 5D8 6B8
		6C4 8C5
PP_RF2_2V05_DRX_BB	PP_RF2_2V05_DRX_BB -	8B4 8D1
	@radio_mlb_lib.RADIO_MLB	
	PP_RF2_2V05_PRX_BB -	8B4 8D1
	@radio_mlb_lib.RADIO_MLB	
	PP_RF2_2V05_PRX_VCO -	8B4 8C1
	@radio_mlb_lib.RADIO_MLB	
	PP_RF2_2V05_SHDR_VCO -	8A4 8C1
	@radio_mlb_lib.RADIO_MLB	
	PP_RF2_2V05_TX_BB -	8B1 8D1
	@radio_mlb_lib.RADIO_MLB	
	PP_RF2_2V05_TX_DA -	8B1 8D1
	@radio_mlb_lib.RADIO_MLB	
	PP_RF2_2V05_TX_PLL -	8B1 8C1
	@radio_mlb_lib.RADIO_MLB	
	PP_RF2_2V05_TX_VCO -	8B1 8C1
	@radio_mlb_lib.RADIO_MLB	
	PP_RF2_2V05_XO_FILT -	8B1 8C1

	@radio_mlb_lib.RADIO_MLB	
	PP_RF2_2V05_XO_FILT -	8B1 8C1
	@radio_mlb_lib.RADIO_MLB	
	PP_RF2_2V05_TX_VCO -	8B1 8C1
	@radio_mlb_lib.RADIO_MLB	
	PP_RF2_2V05_TX_PLL -	8B1 8C1
	@radio_mlb_lib.RADIO_MLB	
	PP_RF2_2V05_TX_DA -	8B1 8D1
	@radio_mlb_lib.RADIO_MLB	
	PP_RF2_2V05_TX_BB -	8B1 8D1
	@radio_mlb_lib.RADIO_MLB	
	PP_RF2_2V05_SHDR_VCO -	8A4 8C1
	@radio_mlb_lib.RADIO_MLB	
	PP_RF2_2V05_PRX_VCO -	8B4 8C1
	@radio_mlb_lib.RADIO_MLB	
	PP_RF2_2V05_PRX_BB -	8B4 8D1
	@radio_mlb_lib.RADIO_MLB	
PP_SMPS1_MSMC_1V05	PP_SMPS1_MSMC_1V05 -	2A8 3D1 5C8 5C8 5D8
	@radio_mlb_lib.RADIO_MLB	
PP_SMPS2_RF1_1V3	PP_SMPS2_RF1_1V3 -	3D1 5A5 8D8
	@radio_mlb_lib.RADIO_MLB	
PP_SMPS4_RF2_2V05	PP_SMPS4_RF2_2V05 -	3B6 3C1 8D3
	@radio_mlb_lib.RADIO_MLB	
PP_SMPS5_DSP_1V05	PP_SMPS5_DSP_1V05 -	3B6 3C1
	@radio_mlb_lib.RADIO_MLB	
PP_SPI_NOR_1V8	PP_SPI_NOR_1V8 -	6B7
	@radio_mlb_lib.RADIO_MLB	
PP_SYNC	PP_SYNC - @radio_mlb_lib.RADIO_MLB	2C8 6B2
PP_VCC_MAIN_WLAN	PP_VCC_MAIN_WLAN -	2D8 23D6
	@radio_mlb_lib.RADIO_MLB	
PP_VREG	PP_VREG - @radio_mlb_lib.RADIO_MLB	3D2
PP_VSW_S1	PP_VSW_S1 -	3C4
	@radio_mlb_lib.RADIO_MLB	
PP_VSW_S2	PP_VSW_S2 -	3C4
	@radio_mlb_lib.RADIO_MLB	
PP_VSW_S3	PP_VSW_S3 -	3C4
	@radio_mlb_lib.RADIO_MLB	
PP_VSW_S4	PP_VSW_S4 -	3C4
	@radio_mlb_lib.RADIO_MLB	
PP_VSW_S5	PP_VSW_S5 -	3B4
	@radio_mlb_lib.RADIO_MLB	
PP_WLAN_VDDIO_1V8	PP_WLAN_VDDIO_1V8 -	23B7 23C4
	@radio_mlb_lib.RADIO_MLB	
PP_WL_BT_VDDIO_AP	PP_WL_BT_VDDIO_AP -	2C8 23C3
	@radio_mlb_lib.RADIO_MLB	
PRX_BB_I_N	PRX_BB_I_N -	6C8 7D5
	@radio_mlb_lib.RADIO_MLB	
PRX_BB_I_P	PRX_BB_I_P -	6C8 7D5
	@radio_mlb_lib.RADIO_MLB	
PRX_BB_Q_N	PRX_BB_Q_N -	6C8 7D5
	@radio_mlb_lib.RADIO_MLB	
PRX_BB_Q_P	PRX_BB_Q_P -	6C8 7D5
	@radio_mlb_lib.RADIO_MLB	
PS_HOLD	PS_HOLD - @radio_mlb_lib.RADIO_MLB	4C8 6B2
PS_HOLD_PMIC	PS_HOLD_PMIC -	2C3 4C7
	@radio_mlb_lib.RADIO_MLB	
RADIO_ON_L	RADIO_ON_L -	2D3 2D8 4C8
	@radio_mlb_lib.RADIO_MLB	
REF_BYP	REF_BYP - @radio_mlb_lib.RADIO_MLB	3C5
REF_GND	REF_GND - @radio_mlb_lib.RADIO_MLB	3C5
RESET_DET_L	RESET_DET_L -	2C1 2D8 6B2
	@radio_mlb_lib.RADIO_MLB	
RESET_PMU_L	RESET_PMU_L -	2D3 2D8 4C8
	@radio_mlb_lib.RADIO_MLB	
RF_RESET_L	RF_RESET_L -	2C3 2D8
	@radio_mlb_lib.RADIO_MLB	
RREFEXT	RREFEXT - @radio_mlb_lib.RADIO_MLB	5A5
S1_GND	S1_GND - @radio_mlb_lib.RADIO_MLB	3B6 3D2 4B6
S2_GND	S2_GND - @radio_mlb_lib.RADIO_MLB	3B6 3C2 4B6
S3_GND	S3_GND - @radio_mlb_lib.RADIO_MLB	3B6 3C2 4B6
S4_GND	S4_GND - @radio_mlb_lib.RADIO_MLB	3B6 3C2 4B6
S5_GND	S5_GND - @radio_mlb_lib.RADIO_MLB	3B2 3B5 4B6
SDIO_DATA_1	SDIO_DATA_1 -	23A7 23B6
	@radio_mlb_lib.RADIO_MLB	
SDIO_DATA_2	SDIO_DATA_2 -	23A7 23B6
	@radio_mlb_lib.RADIO_MLB	
SIMCRD_CLK_CONN	SIMCRD_CLK_CONN -	2A2 2A6 2C1 6C4
	@radio_mlb_lib.RADIO_MLB	
SIMCRD_IO_CONN	SIMCRD_IO_CONN -	2A4 2A4 2C1 6C4
	@radio_mlb_lib.RADIO_MLB	
SIMCRD_RST_CONN	SIMCRD_RST_CONN -	2A4 2A6 2C1 6C4
	@radio_mlb_lib.RADIO_MLB	
SIM_TRAY_DETECT	SIM_TRAY_DETECT -	2A2 2A5 2C1 6C4
	@radio_mlb_lib.RADIO_MLB	
SLEEP_CLK_32K	SLEEP_CLK_32K -	2D6 4B2 5B5
	@radio_mlb_lib.RADIO_MLB	
SPI_CLK	SPI_CLK - @radio_mlb_lib.RADIO_MLB	6A8 6C4
SPI_CS_L	SPI_CS_L - @radio_mlb_lib.RADIO_MLB	6A6 6C4
SPI_DATA_MISO	SPI_DATA_MISO -	6A6 6C4
	@radio_mlb_lib.RADIO_MLB	
SPI_DATA_MOSI	SPI_DATA_MOSI -	6A8 6C4
	@radio_mlb_lib.RADIO_MLB	
TX_BB_I_N	TX_BB_I_N -	6C6 7D4
	@radio_mlb_lib.RADIO_MLB	
TX_BB_I_P	TX_BB_I_P -	6C6 7D4
	@radio_mlb_lib.RADIO_MLB	
TX_BB_Q_N	TX_BB_Q_N -	6C6 7D4
	@radio_mlb_lib.RADIO_MLB	
TX_BB_Q_P	TX_BB_Q_P -	6C6 7D4
	@radio_mlb_lib.RADIO_MLB	
TX_GTR_THRESH	TX_GTR_THRESH -	2D8 6C2
	@radio_mlb_lib.RADIO_MLB	
TX_GTR_THRESH_OD	TX_GTR_THRESH_OD -	2A8 6B2
	@radio_mlb_lib.RADIO_MLB	
VDDPX_BIAS	VDDPX_BIAS -	4D3 5B6
	@radio_mlb_lib.RADIO_MLB	
VREF_DAC_BIAS	VREF_DAC_BIAS -	4C3 6C6
	@radio_mlb_lib.RADIO_MLB	
WLAN_BUCK_OUT	WLAN_BUCK_OUT -	23C7
	@radio_mlb_lib.RADIO_MLB	
WLAN_CLK32K	WLAN_CLK32K -	23C6
	@radio_mlb_lib.RADIO_MLB	
WLAN_COEX_RXD	WLAN_COEX_RXD -	23A5 23B6
	@radio_mlb_lib.RADIO_MLB	
WLAN_COEX_TXD	WLAN_COEX_TXD -	2C6 23A5 23B6
	@radio_mlb_lib.RADIO_MLB	
WLAN_HSIC3_DEVICE_RD	WLAN_HSIC3_DEVICE_RDY -	2C6 2C8 23B3
Y	@radio_mlb_lib.RADIO_MLB	
WLAN_HSIC3_RESUME	WLAN_HSIC3_RESUME -	2C6 2D8 23B3
	@radio_mlb_lib.RADIO_MLB	
WLAN_REG_ON	WLAN_REG_ON -	2C1 2C8 23C6
	@radio_mlb_lib.RADIO_MLB	
WLAN_SR_VLX1	WLAN_SR_VLX1 -	23B6
	@radio_mlb_lib.RADIO_MLB	

WLAN_TX_BLANK	WLAN_TX_BLANK -	6B2 23B3
	@radio_mlb_lib.RADIO_MLB	
WLAN_UART_RXD	WLAN_UART_RXD -	2C8 23B3
	@radio_mlb_lib.RADIO_MLB	
WLAN_UART_TXD	WLAN_UART_TXD -	2C8 23B3
	@radio_mlb_lib.RADIO_MLB	
WTR_BB_TX_DAC_IREF	WTR_BB_TX_DAC_IREF -	6C6 7D4
	@radio_mlb_lib.RADIO_MLB	
WTR_GP_DATA0	WTR_GP_DATA0 -	6B2 7D4
	@radio_mlb_lib.RADIO_MLB	
WTR_GP_DATA1	WTR_GP_DATA1 -	6B2 7D4
	@radio_mlb_lib.RADIO_MLB	
WTR_GP_DATA2	WTR_GP_DATA2 -	6B2 7C4
	@radio_mlb_lib.RADIO_MLB	
WTR_RBIAS	WTR_RBIAS -	7C4
	@radio_mlb_lib.RADIO_MLB	
WTR_RF_ON	WTR_RF_ON -	2C6 6B4 7C4
	@radio_mlb_lib.RADIO_MLB	
WTR_RX_ON	WTR_RX_ON -	2C6 6B4 7C4
	@radio_mlb_lib.RADIO_MLB	
WTR_SSBI_PRX_DRX	WTR_SSBI_PRX_DRX -	2C6 6B2 7C4
	@radio_mlb_lib.RADIO_MLB	
WTR_SSBI_TX_GPS	WTR_SSBI_TX_GPS -	2C6 6B2 7C4
	@radio_mlb_lib.RADIO_MLB	
XO_GND	XO_GND - @radio_mlb_lib.RADIO_MLB	4A4
XO_THERM_Y1	XO_THERM_Y1 -	4B4
	@radio_mlb_lib.RADIO_MLB	

Title: Cref Part Report
Design: radio_mlb
Date: Sep 5 9:13:14 2012

C1	SUPPR_TRANSIENT_2P1_01005	radio_mlb[2A4]
C2	CAP_0201-1	radio_mlb[3B4]
C3	CAP_0201-1	radio_mlb[3B4]
C4	CAP_0201-1	radio_mlb[3B4]
C5	CAP_0201-1	radio_mlb[3A3]
C6	CAP_0201-1	radio_mlb[3B3]
C7	CAP_0201-1	radio_mlb[3A3]
C8	CAP_0402-1	radio_mlb[3B3]
C9	CAP_0402-1	radio_mlb[3A3]
C10	CAP_0402-1	radio_mlb[3B3]
C11	CAP_0402-1	radio_mlb[3A2]
C12	CAP_0201-1	radio_mlb[3D2]
C13	CAP_0402-1	radio_mlb[3B2]
C14	CAP_0201-1	radio_mlb[5D8]
C15	CAP_0201-1	radio_mlb[5D8]
C16	CAP_0201-1	radio_mlb[5D8]
C17	CAP_0201-1	radio_mlb[5D8]
C18	CAP_0201-1	radio_mlb[5D7]
C19	CAP_0201-1	radio_mlb[5D7]
C20	CAP_0201-1	radio_mlb[5D7]
C21	CAP_0201-1	radio_mlb[5D7]
C22	CAP_0201-1	radio_mlb[5D7]
C23	CAP_0201-1	radio_mlb[5D7]
C24	CAP_0201-1	radio_mlb[5D7]
C25	CAP_0201-1	radio_mlb[5D7]
C26	CAP_0201-1	radio_mlb[5D7]
C27	CAP_0201-1	radio_mlb[5D6]
C28	CAP_0201-1	radio_mlb[5D6]
C29	CAP_0201-1	radio_mlb[5D6]
C30	CAP_0201-1	radio_mlb[5D6]
C31	CAP_01005	radio_mlb[5B6]
C32	CAP_0201-1	radio_mlb[5D6]
C33	CAP_0201-1	radio_mlb[5A6]
C34	CAP_0201-1	radio_mlb[5D6]
C35	CAP_0201-1	radio_mlb[5D5]
C36	CAP_0201-1	radio_mlb[5D5]
C37	CAP_01005	radio_mlb[23C4]
C38	CAP_01005	radio_mlb[20C6]
C39	CAP_01005	radio_mlb[17B5]
C40	CAP_01005	radio_mlb[17C5]
C41	CAP_402	radio_mlb[16B3]
C42	CAP_0402-1	radio_mlb[3C8]
C43	CAP_0402-1	radio_mlb[3C7]
C44	CAP_0402-1	radio_mlb[3C7]
C45	CAP_01005	radio_mlb[3C7]
C46	CAP_0402	radio_mlb[3B6]
C47	CAP_0402	radio_mlb[3B6]
C48	CAP_0402	radio_mlb[3B6]
C49	CAP_0402	radio_mlb[3B6]
C50	CAP_01005	radio_mlb[3C5]
C51	CAP_0402	radio_mlb[3B5]
C52	CAP_0201-1	radio_mlb[3A4]
C53	CAP_0201-1	radio_mlb[3A4]
C54	CAP_0201-1	radio_mlb[3A4]
C55	CAP_603	radio_mlb[3D2]
C56	CAP_603	radio_mlb[3C2]
C57	CAP_0603-3	radio_mlb[3C2]
C58	CAP_0603-3	radio_mlb[3C2]
C59	CAP_603	radio_mlb[3B2]
C60	CAP_01005	radio_mlb[3C2]
C61	CAP_01005	radio_mlb[6B7]
C62	CAP_01005	radio_mlb[6C6]
C63	CAP_01005	radio_mlb[17B5]
C64	CAP_01005	radio_mlb[17B4]
C65	CAP_01005	radio_mlb[17B4]
C66	CAP_01005	radio_mlb[17B4]
C67	CAP_01005	radio_mlb[9B4]
C68	CAP_0201-1	radio_mlb[5C8]
C69	CAP_0201-1	radio_mlb[5A6]
C70	CAP_0201-1	radio_mlb[5A6]
C71	CAP_0201-1	radio_mlb[5B6]
C72	CAP_0402-1	radio_mlb[8D7]
C73	CAP_01005	radio_mlb[8D6]
C74	CAP_01005	radio_mlb[8D6]
C75	CAP_01005	radio_mlb[8C6]
C76	CAP_01005	radio_mlb[8C6]
C77	CAP_01005	radio_mlb[8C6]
C78	CAP_01005	radio_mlb[8C6]
C79	CAP_01005	radio_mlb[8B6]
C80	CAP_01005	radio_mlb[8B6]
C81	CAP_01005	radio_mlb[8B6]
C82	CAP_01005	radio_mlb[8A6]
C83	CAP_01005	radio_mlb[8A6]
C84	CAP_01005	radio_mlb[15B6]
C85	CAP_01005	radio_mlb[8D5]
C86	CAP_01005	radio_mlb[8D5]
C87	CAP_0201-1	radio_mlb[8C5]
C88	CAP_0402-1	radio_mlb[8D3]
C89	CAP_01005	radio_mlb[8C1]
C90	CAP_01005	radio_mlb[8C1]
C91	CAP_01005	radio_mlb[8C1]
C92	CAP_01005	radio_mlb[8B1]
C93	CAP_01005	radio_mlb[9A5]
C94	CAP_201	radio_mlb[20A5]
C95	CAP_201	radio_mlb[20A5]
C96	CAP_01005	radio_mlb[20C6]
C97	CAP_01005	radio_mlb[20C6]
C98	CAP_01005	radio_mlb[20C6]
C99	CAP_01005	radio_mlb[20D4]
C101	CAP_201	radio_mlb[20B7]
C102	CAP_402	radio_mlb[23B7]
C103	CAP_0402-1	radio_mlb[23D5]
C104	CAP_01005	radio_mlb[23D5]
C105	CAP_01005	radio_mlb[23C4]
C106	CAP_0201	radio_mlb[23C2]
C107	CAP_0201	radio_mlb[23C2]
C108	CAP_01005	radio_mlb[11D3]
C109	CAP_01005	radio_mlb[10B5]
C110	RES_201	radio_mlb[17B3]
C111	CAP_201	radio_mlb[9B2]
C112	CAP_01005	radio_mlb[11D3]
C113	CAP_01005	radio_mlb[11D4]
C114	CAP_201	radio_mlb[9B5]
C115	CAP_201	radio_mlb[9A5]
C116	CAP_01005	radio_mlb[14C7]
C117	CAP_01005	radio_mlb[14C7]
C118	CAP_01005	radio_mlb[14D5]
C119	CAP_0201-1	radio_mlb[14D5]
C120	IND_0201	radio_mlb[14C3]
C121	IND_0201	radio_mlb[14C3]
C122	CAP_01005	radio_mlb[17C5]
C123	CAP_01005	radio_mlb[11D2]
C124	CAP_01005	radio_mlb[9C4]
C125	RES_01005	radio_mlb[10D7]
C126	RES_01005	radio_mlb[10C7]
C127	CAP_01005	radio_mlb[4B4]
C128	CAP_01005	radio_mlb[7C5]
C129	RES_01005	radio_mlb[10C7]
C130	RES_01005	radio_mlb[10C4]
C131	IND_01005	radio_mlb[13C8]
C132	CAP_01005	radio_mlb[10B4]
C133	CAP_01005	radio_mlb[11B2]
C134	CAP_01005	radio_mlb[11B2]
C136	CAP_01005	radio_mlb[18C6]
C137	CAP_01005	radio_mlb[18C6]
C138	CAP_01005	radio_mlb[18C5]
C139	CAP_01005	radio_mlb[18D3]
C140	RES_201	radio_mlb[17C4]
C141	CAP_01005	radio_mlb[11D7]
C142	CAP_01005	radio_mlb[11D6]
C143	CAP_01005	radio_mlb[11D6]
C144	CAP_01005	radio_mlb[16B6]
C145	CAP_01005	radio_mlb[16B6]
C146	RES_01005	radio_mlb[12C7]
C147	CAP_01005	radio_mlb[12C6]
C148	CAP_01005	radio_mlb[12D5]
C149	CAP_0201-1	radio_mlb[12D5]
C150	CAP_201	radio_mlb[12C3]
C151	CAP_201	radio_mlb[12C3]
C152	CAP_01005	radio_mlb[11D6]
C153	CAP_01005	radio_mlb[11D6]
C154	CAP_01005	radio_mlb[11D6]
C155	IND_01005	radio_mlb[18C6]
C156	IND_01005	radio_mlb[18B6]
C157	CAP_01005	radio_mlb[20D2]
C158	CAP_01005	radio_mlb[20B2]
C160	CAP_01005	radio_mlb[10B7]
C161	CAP_01005	radio_mlb[9C7]
C162	CAP_01005	radio_mlb[9B7]
C163	CAP_01005	radio_mlb[9C6]
C164	CAP_01005	radio_mlb[9C6]
C165	CAP_01005	radio_mlb[9C6]
C166	CAP_01005	radio_mlb[9B6]
C167	CAP_01005-1	radio_mlb[15C7]
C168	CAP_01005	radio_mlb[16B3]
C169	CAP_01005	radio_mlb[16C4]
C170	CAP_0201	radio_mlb[23C2]
C171	CAP_01005	radio_mlb[15B7]
C172	CAP_01005	radio_mlb[15C6]
C173	CAP_01005	radio_mlb[10B6]
C174	RES_01005	radio_mlb[10B4]
C175	CAP_01005	radio_mlb[11D3]
C176	CAP_01005	radio_mlb[11D3]
C182	CAP_01005	radio_mlb[7C4]
C183	CAP_01005	radio_mlb[15B5]
C184	CAP_01005	radio_mlb[15C5]
C185	CAP_402	radio_mlb[15C5]
C186	CAP_01005	radio_mlb[15B5]
C187	CAP_0201-1	radio_mlb[15C4]
C188	CAP_01005	radio_mlb[15C4]
C189	CAP_01005	radio_mlb[16C5]
C197	CAP_01005	radio_mlb[18B5]
C198	CAP_01005	radio_mlb[18D4]
C210	CAP_01005	radio_mlb[18C6]
C211	CAP_01005	radio_mlb[10B6]
C212	CAP_01005	radio_mlb[10B6]
C213	CAP_01005	radio_mlb[10D7]
C214	IND_01005	radio_mlb[10D7]
C215	IND_01005	radio_mlb[10C7]
C216	IND_01005	radio_mlb[13C8]
C217	IND_01005	radio_mlb[10C7]
C218	CAP_01005	radio_mlb[13C8]
C219	CAP_01005	radio_mlb[13B8]
C220	IND_01005	radio_mlb[10D7]
C221	CAP_0201	radio_mlb[19B6]
C226	RES_01005	radio_mlb[10D4]
C227	CAP_01005	radio_mlb[13C6]
C228	CAP_01005	radio_mlb[13B5]
C229	CAP_01005	radio_mlb[13C4]
C230	CAP_0201-1	radio_mlb[13C4]
C233	CAP_0201	radio_mlb[13C2]
C234	IND_0201	radio_mlb[13B2]
C237	CAP_01005	radio_mlb[11B7]
C238	CAP_01005	radio_mlb[11C7]
C239	CAP_01005	radio_mlb[11C7]
C240	CAP_01005	radio_mlb[11C7]
C241	CAP_01005	radio_mlb[11D6]
C242	CAP_0201-1	radio_mlb[11D6]
C244	CAP_01005	radio_mlb[8D1]
C245	CAP_201	radio_mlb[11B5]
C246	CAP_01005	radio_mlb[11B5]
C247	CAP_01005	radio_mlb[20D5]
C248	RES_201	radio_mlb[11C4]
C249	RES_201	radio_mlb[11C4]
C250	CAP_201	radio_mlb[11D4]
C251	CAP_01005	radio_mlb[7C2]
C252	CAP_201	radio_mlb[11C3]
C253	CAP_01005	radio_mlb[11B3]
C255	CAP_01005	radio_mlb[11B2]
C256	CAP_01005	radio_mlb[11B2]
C258	RES_201	radio_mlb[11D4]
C261	CAP_201	radio_mlb[11C4]
C263	CAP_01005	radio_mlb[11C2]
C264	CAP_201	radio_mlb[11B6]
C268	CAP_01005	radio_mlb[17C3]
C269	CAP_01005	radio_mlb[17C2]
C271	CAP_01005	radio_mlb[20D2]
C272	CAP_01005	radio_mlb[11D3]
C273	CAP_01005	radio_mlb[11B3]
C274	CAP_01005	radio_mlb[8C6]
C280	CAP_0201	radio_mlb[23C2]
C281	CAP_0201	radio_mlb[23C2]
C1201	CAP_0402	radio_mlb[16C5]
C1214	CAP_01005	radio_mlb[16C5]
C1215	CAP_0201-1	radio_mlb[16C4]
C1726	CAP_01005	radio_mlb[20D7]
FL2	FIL_SAW_TX_B1B3B34B39_LGA	radio_mlb[10D3]
FL3	FILTER_SAW_SATGR832M BM0F57_LGA	radio_mlb[10D6]
FL4	FILTER_2P_01005-1	radio_mlb[6B7]
FL9	FILTER_4P10_LFL0Q1G6 9TM1D511	radio_mlb[20C6]
FL11	FILTER_SAWFD847MGA0F 57_LGA	radio_mlb[13C7]
FL12	FILTER_3P3_LFL181G95 TF	radio_mlb[11C3]
FL1701	FILTER_3P5_LFE18832M HC1D449	radio_mlb[20D7]
J1	CON_M54ST_D4MT_SM_M-ST-SM	radio_mlb[2D2]
J2	CON_F1ST_COAX_S3MT_S M_F-ST-SM	radio_mlb[2B2]
J3	CON_F1ST_COAX_S3MT_S M_F-ST-SM	radio_mlb[2B2]
J4	CON_F1ST_COAX_S3MT_S M_F-ST-SM	radio_mlb[20A6]
J5	CON_F1ST_COAX_S3MT_S M_F-ST-SM	radio_mlb[20C1]
J6	CON_F1ST_COAX_S3MT_S M_F-ST-SM	radio_mlb[20C1]
J8	CON_F2ST_COAX_1MT_SM _F-RT-SM	radio_mlb[20D4]
J9	CON_F2ST_COAX_3MT_SM _F-RT-SM	radio_mlb[20A4]
J10	CON_F1ST_COAX_S3MT_S M_F-ST-SM	radio_mlb[20B8]
J11	CON_F6ST_6MT_SIMCARD _SM3_F-ST-SM	radio_mlb[2A6]
J12	CON_F2ST_COAX_1MT_SM _F-RT-SM	radio_mlb[19C5]
L1	IND_0806	radio_mlb[3D3]
L2	IND_0806	radio_mlb[3C3]
L3	IND_0806	radio_mlb[3C3]
L4	IND_0806	radio_mlb[3D3]
L5	IND_TFA252010-SM	radio_mlb[3C3]
L6	IND_01005	radio_mlb[20D7]
L7	IND_0201	radio_mlb[9C3]
L8	IND_03015	radio_mlb[20D4]
L9	IND_0603	radio_mlb[23B6]
L10	RES_201	radio_mlb[9B4]
L11	RES_201	radio_mlb[9A4]
L12	RES_01005	radio_mlb[11D1]
L13	IND_0201	radio_mlb[17B3]
L14	IND_01005	radio_mlb[14C6]
L15	IND_01005	radio_mlb[14C6]
L16	IND_0201	radio_mlb[14C3]
L17	IND_0201	radio_mlb[14C3]
L18	RES_201	radio_mlb[9B2]
L19	IND_01005	radio_mlb[10A4]
L20	IND_01005	radio_mlb[11B7]
L21	IND_MAKK2016-SM	radio_mlb[16B4]
L22	IND_01005	radio_mlb[12C7]
L23	IND_01005	radio_mlb[12C7]
L24	RES_201	radio_mlb[12C3]
L25	IND_0201	radio_mlb[9B3]
L26	FILTER_4P11_LLP	radio_mlb[9C5]
L27	IND_0201DS	radio_mlb[9C6]
L28	CAP_201	radio_mlb[13B2]
L29	RES_01005	radio_mlb[11C7]
L30	RES_01005	radio_mlb[11C7]
L31	IND_0201DS	radio_mlb[9C7]
L32	IND_0201DS	radio_mlb[9B7]
L33	RES_201	radio_mlb[20B7]
L34	IND_0201DS	radio_mlb[9B6]
L35	IND_01005	radio_mlb[15B7]
L36	IND_01005	radio_mlb[15C7]
L37	IND_0201	radio_mlb[15B3]
L38	IND_0201	radio_mlb[15B3]
L39	IND_0201	radio_mlb[15B3]
L40	IND_01005	radio_mlb[18B5]
L41	IND_0201	radio_mlb[17C4]
L42	IND_01005	radio_mlb[18B5]
L43	IND_01005	radio_mlb[18C5]
L44	RES_01005	radio_mlb[11C7]
L45	RES_01005	radio_mlb[11B7]
L46	RES_01005	radio_mlb[18B4]
L47	RES_01005	radio_mlb[18A4]
L48	IND_0201	radio_mlb[20C4]
L49	IND_0201	radio_mlb[20B5]
L50	IND_0201	radio_mlb[20C5]
L51	IND_0201	radio_mlb[20C3]
L52	CAP_01005	radio_mlb[18A6]
L53	IND_01005	radio_mlb[13C5]
L54	IND_01005	radio_mlb[13C5]
L55	IND_01005	radio_mlb[9B7]
L56	IND_01005	radio_mlb[18A7]
L57	IND_0201	radio_mlb[13C2]
L58	IND_0201	radio_mlb[9D6]
L59	IND_01005	radio_mlb[10D4]
L60	IND_01005	radio_mlb[10C4]
L61	IND_01005	radio_mlb[10C2]
L62	IND_0201	radio_mlb[19C6]
L63	IND_01005	radio_mlb[18B4]
L64	IND_0201	radio_mlb[9D6]
L65	IND_01005	radio_mlb[18A6]
L66	IND_01005	radio_mlb[20D7]
L67	IND_01005	radio_mlb[20C7]
L68	IND_01005	radio_mlb[20C7]
L69	IND_01005	radio_mlb[20D4]
L70	RES_01005	radio_mlb[11B2]
L71	RES_01005	radio_mlb[11B2]
L72	IND_0201	radio_mlb[11A2]
L73	IND_01005	radio_mlb[11C2]
L74	IND_01005	radio_mlb[9D4]
L75	IND_01005	radio_mlb[9C4]
L76	RES_201	radio_mlb[12C3]
L77	IND_01005	radio_mlb[18A4]
L78	IND_0201	radio_mlb[9B3]
L79	IND_0201	radio_mlb[9D7]
L80	RES_201	radio_mlb[9A2]
L81	IND_01005	radio_mlb[10C2]
L82	IND_01005	radio_mlb[12C6]
L83	RES_01005	radio_mlb[9A4]
L90	IND_01005	radio_mlb[9D4]
L91	IND_01005	radio_mlb[9D4]
L92	IND_01005	radio_mlb[9C4]
L93	IND_01005	radio_mlb[9C4]
L94	CAP_0201	radio_mlb[13C2]
L95	IND_01005	radio_mlb[9B6]
L96	IND_01005	radio_mlb[9A6]
L97	CAP_201	radio_mlb[11A2]
L98	IND_01005	radio_mlb[10C2]
L99	IND_P_0201	radio_mlb[9A3]
L100	IND_01005	radio_mlb[11C4]
L1732	IND_03015	radio_mlb[20D6]
PP1	PROBEPOINT_SM	radio_mlb[2D7]
PP2	PROBEPOINT_SM	radio_mlb[2D7]
PP3	PROBEPOINT_SM	radio_mlb[2D7]
PP4	PROBEPOINT_SM	radio_mlb[2B7]
PP5	PROBEPOINT_SM	radio_mlb[2B7]
PP6	PROBEPOINT_SM	radio_mlb[2B7]
PP7	PROBEPOINT_SM	radio_mlb[2A7]
PP11	PROBEPOINT_SM	radio_mlb[2D7]
PP14	PROBEPOINT_SM	radio_mlb[2C7]
PP15	PROBEPOINT_SM	radio_mlb[2C7]
PP18	PROBEPOINT_SM	radio_mlb[2C7]
PP19	PROBEPOINT_SM	radio_mlb[2C7]
PP20	PROBEPOINT_SM	radio_mlb[2C7]
PP21	PROBEPOINT_SM	radio_mlb[2C7]
PP22	PROBEPOINT_SM	radio_mlb[2C7]
PP40	PROBEPOINT_SM	radio_mlb[2C7]
PP41	PROBEPOINT_SM	radio_mlb[2C7]
PP42	PROBEPOINT_SM	radio_mlb[2B7]
PP43	PROBEPOINT_SM	radio_mlb[2B7]
PP44	PROBEPOINT_SM	radio_mlb[2B7]
PP45	PROBEPOINT_SM	radio_mlb[2B7]
PP46	PROBEPOINT_SM	radio_mlb[2B7]
PP47	PROBEPOINT_SM	radio_mlb[2B7]
R1	RES_01005	radio_mlb[18D6]
R2	RES_01005	radio_mlb[18D5]
R3	RES_01005	radio_mlb[2A5]
R4	RES_01005	radio_mlb[6C4]
R5	RES_201	radio_mlb[17B4]
R6	RES_01005	radio_mlb[5B6]
R7	RES_01005	radio_mlb[5A5]
R8	RES_01005	radio_mlb[10D2]
R9	RES_01005	radio_mlb[5B2]
R10	RES_01005	radio_mlb[5D1]
R11	RES_201	radio_mlb[20A5]
R13	RES_201	radio_mlb[20B7]
R14	RES_01005	radio_mlb[23B7]
R15	RES_01005	radio_mlb[23A7]
R16	RES_01005	radio_mlb[23C5]
R17	RES_01005	radio_mlb[23C3]
R18	RES_01005	radio_mlb[23C3]
R19	RES_201	radio_mlb[8D3]
R20	RES_01005	radio_mlb[4C8]
R21	RES_01005	radio_mlb[4C8]
R22	RES_01005	radio_mlb[4B6]
R23	RES_01005	radio_mlb[4D4]
R24	RES_01005	radio_mlb[4D4]
R25	RES_01005	radio_mlb[4D3]
R26	RES_01005	radio_mlb[4D3]
R27	RES_01005	radio_mlb[7C4]
R28	RES_01005	radio_mlb[7C2]
R29	RES_01005	radio_mlb[7C2]
R30	RES_01005	radio_mlb[7C2]
R32	RES_01005	radio_mlb[15C5]
R33	RES_01005	radio_mlb[16C7]
R34	RES_01005	radio_mlb[16C6]
R35	RES_01005	radio_mlb[13C3]
R36	RES_0201	radio_mlb[12C3]
R37	RES_201	radio_mlb[15B3]
R38	RES_0201	radio_mlb[12C3]
R39	RES_01005	radio_mlb[18C2]
R43	RES_01005	radio_mlb[23B7]
R44	RES_01005	radio_mlb[23A7]
R45	RES_01005	radio_mlb[23B3]
R50	RES_01005	radio_mlb[7C4]
R51	RES_01005	radio_mlb[23A6]
R52	RES_01005	radio_mlb[23A6]
R53	RES_201	radio_mlb[8D8]
R64	RES_01005	radio_mlb[11D4]
R65	RES_01005	radio_mlb[11B4]
SP1	SMT_PAD_SM-NSP	radio_mlb[20D8]
SP2	SMT_PAD_SM-NSP	radio_mlb[19B7]
SW1	SWI_SPDT_BGS12SL6_TS LP6-2	radio_mlb[17C3]
TP1	TP_TP-P6	radio_mlb[20D4]
U1	MODEM_MDM9615M_1_BGA	radio_mlb[5D2 5C7 5D4 5B4]
U1	MODEM_MDM9615M_1_BGA	radio_mlb[6C3 6D7]
U2	PM8018_WLNSP105_BGA	radio_mlb[3C5]
U2	PM8018_WLNSP105_BGA	radio_mlb[4B7 4C7 4D3 4B4]
U3	WTR1605_SM	radio_mlb[7D4 7B7 7D7 7C7]
U3	WTR1605_SM	radio_mlb[8B3]
U4	RF1629_BGA	radio_mlb[11D2]
U5	SUPPR_TPD4E101_SON4	radio_mlb[2A3]
U6	FLASH_MX25U1635E_WLCSP	radio_mlb[6A7]
U7	RF1112_WLCSP	radio_mlb[20D5]
U8	MOD_WIFI_BT_IMPERIAL _LGA60_LGA	radio_mlb[23C5]
U9	FIL_DIPLEXER_885041_LGA	radio_mlb[20C4]
U10	SKY77352_LGA	radio_mlb[15C4]
U11	MAX77270A_WLP	radio_mlb[16C5]
U12	FIL_DIPLEXER_HILOBAND_SM	radio_mlb[20C6]
U13	SWI_SPDT_CXA4011GC_XFLGA	radio_mlb[20C2]
U14	TSINGTAO_LGA	radio_mlb[18C4]
U15	AMP_DUPLEXER_BAND720 _LGA30_LGA	radio_mlb[13C4]
U16	FILTER_SAW_1IN4OUT_LGA	radio_mlb[9A3]
U17	SWI_LMSP3XQQD67_LGA	radio_mlb[17B6]
U18	FILTER_4P12_LLP	radio_mlb[20D3]
U20	AMP_SKY65716_LGA	radio_mlb[19C4]
U22	FIL_BAW_885034_LGA	radio_mlb[18B6]
U23	AMP_DUPLEXER_BAND23_LGA30_LGA	radio_mlb[12C5]
U24	SWI_SPDT_BGS12SL6_TS LP6-2	radio_mlb[10B6]
U25	AMP_PENTA_BAND_LGA26 _LGA	radio_mlb[11C6]
U26	FIL_DIPLEXER_B38_B40 _9P1_LGA	radio_mlb[9B3]
U27	MOD_LMSWFKJM_LGA	radio_mlb[11B3]
U58	AMP_DUPLEXER_BAND58_LGA30_LGA	radio_mlb[14C5]
XW1	SHORT10LP25_WITH_ALTS_SHORT-10L-0.25MM-M	radio_mlb[4B6]
XW2	SHORT10LP25_WITH_ALTS_SHORT-10L-0.25MM-M	radio_mlb[4B6]
XW3	SHORT10LP25_WITH_ALTS_SHORT-10L-0.25MM-M	radio_mlb[4B6]

```
XW4         SHORT10LP25_WITH_ALT radio_mlb[4B6]
            S_SHORT-10L-0.25MM-S
            M
XW6         SHORT10LP25_WITH_ALT radio_mlb[16B4]
            S_SHORT-10L-0.25MM-S
            M
XW8         SHORT_SHORT-01005    radio_mlb[23C7]
XW9         SHORT_LAYER_9_SHORT- radio_mlb[23D6]
            L9-SM
XW10        SHORT10LP1_WITH_ALTS radio_mlb[4A4]
            _SHORT-10L-0.1MM-SM
XW11        SHORT10LP25_WITH_ALT radio_mlb[16B4]
            S_SHORT-10L-0.25MM-S
            M
XW12        SHORT10LP1_WITH_ALTS radio_mlb[2A7]
            _SHORT-10L-0.1MM-SM
XW13        SHORT10LP1_WITH_ALTS radio_mlb[2A7]
            _SHORT-10L-0.1MM-SM
XW14        SHORT10LP1_WITH_ALTS radio_mlb[2A7]
            _SHORT-10L-0.1MM-SM
XW15        SHORT10LP1_WITH_ALTS radio_mlb[2A7]
            _SHORT-10L-0.1MM-SM
XW16        SHORT10LP25_WITH_ALT radio_mlb[4A6]
            S_SHORT-10L-0.25MM-S
            M
XW17        SHORT10LP1_WITH_ALTS radio_mlb[3C5]
            _SHORT-10L-0.1MM-SM
XW20        SHORT_LAYER_9_SHORT- radio_mlb[23D6]
            L9-SM
XW47        SHORT10LP25_WITH_ALT radio_mlb[16C5]
            S_SHORT-10L-0.25MM-S
            M
Y1          CRYSTAL_4PIN2_2.0X1. radio_mlb[4B4]
            60MM
```